LOT 101, TRANSFIELD AVENUE, EDGEWORTH

BRUSH CREEK
LAKE MACQUARIE

MASTER PLAN

STAGE PLAN

PRELIMINARY SITE ANALYSIS PLAN

SCALE 1:300 @ A4

0 5 10 15 20

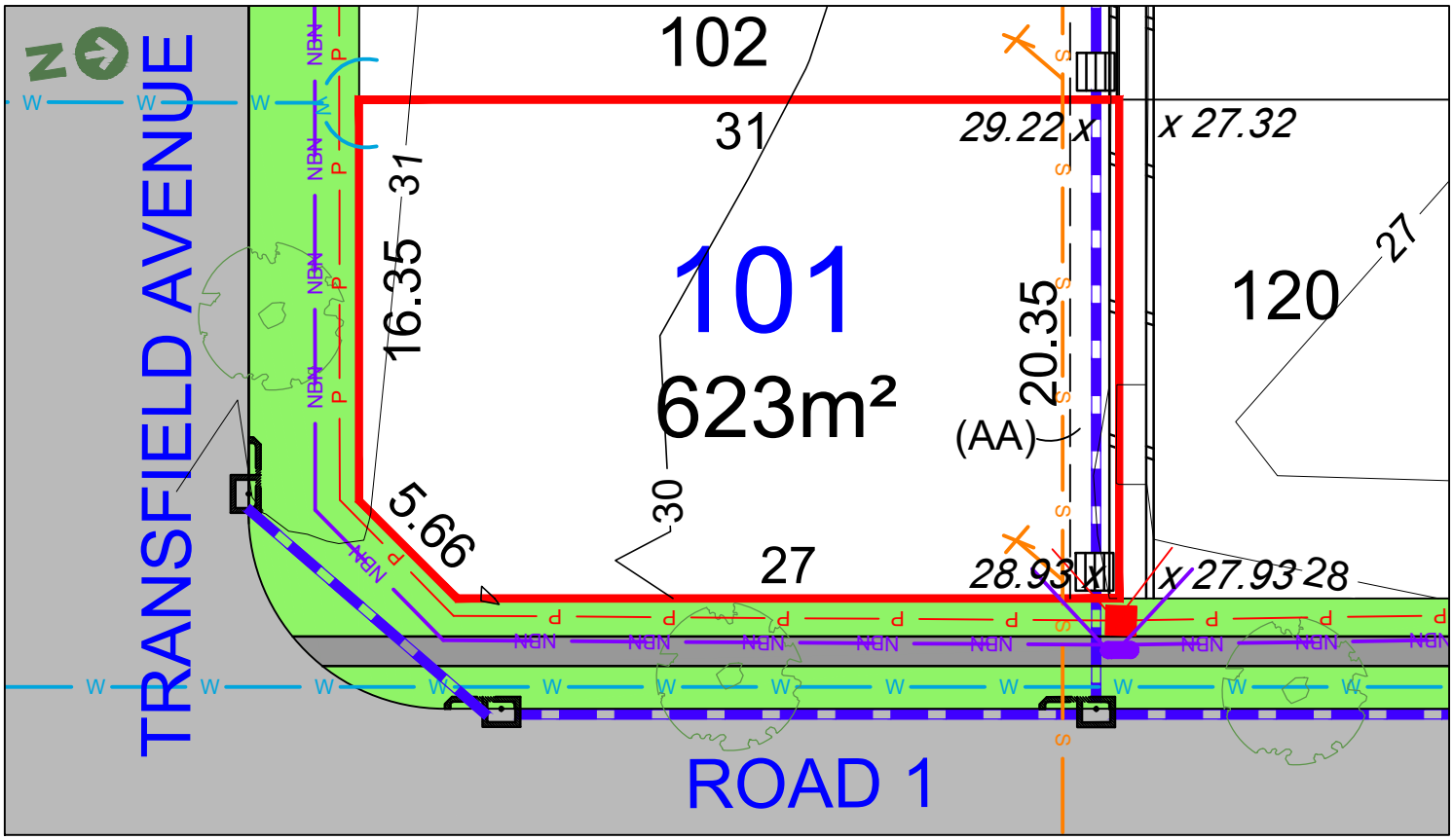

LEGEND:

- TELSTRA /NBN PIT
- HYDRANT
- STOP VALVE
- SEWER MANHOLE
- LP LIGHT POLE
- KERB INLET PIT
- STORMWATER PIT
- ELECTRICITY PILLAR
- ELECTRICAL SUBSTATION
- STREET TREES
- RETAINING WALLS
- STORMWATER PIPE
- SEWER JUNCTION
- S SEWER MAIN
- W WATER MAIN
- NBN TELSTRA /NBN
- P UNDER GROUND POWER

Anticipated Site Classification - H1 Class
(to be confirmed at completion of construction)

(AB) RESTRICTION ON THE USE OF LAND 0.7 WIDE
(AA) EASEMENT TO DRAIN WATER 2.0 WIDE

RESTRICTIONS ON USE OF LAND AFFECT THE LOT

DISCLAIMER/ NOTES:

1. Contours are based on finished design levels and are subject to construction and Council certification and therefore should not be considered as final or as-built.
2. Location of utility services including but not limited to power, water, sewer, communications and gas are subject to construction and Supply Authority certification and therefore should not be considered as final or as-built.
3. Survey information such as boundary dimensions and areas, easements etc are subject to Final Survey. Purchasers should refer to the Deposited Plan and 88B Instrument contained in the Contract for Sale of Land for further detailed information.
4. Bushfire and Geotechnical classification are provided for convenience. Purchasers should refer to referenced detail specialist reports.
5. This Preliminary Site Analysis Plan has been collated from various sources of design information and is provided for convenience to assist Purchasers in obtaining quotations/tenders for dwelling construction.
6. This document does not form part of the Contract of Sale of the Land.

REVISION/S:	HD27 STAGE 1 MARKETING r2
DATE:	8th MARCH 2018
BY:	HIGH DEFINITION DESIGN PTY LTD

LOT 102, TRANSFIELD AVENUE, EDGEWORTH

BRUSH CREEK
LAKE MACQUARIE

MASTER PLAN

STAGE PLAN

PRELIMINARY SITE ANALYSIS PLAN

SCALE 1:300 @ A4

0 5 10 15 20

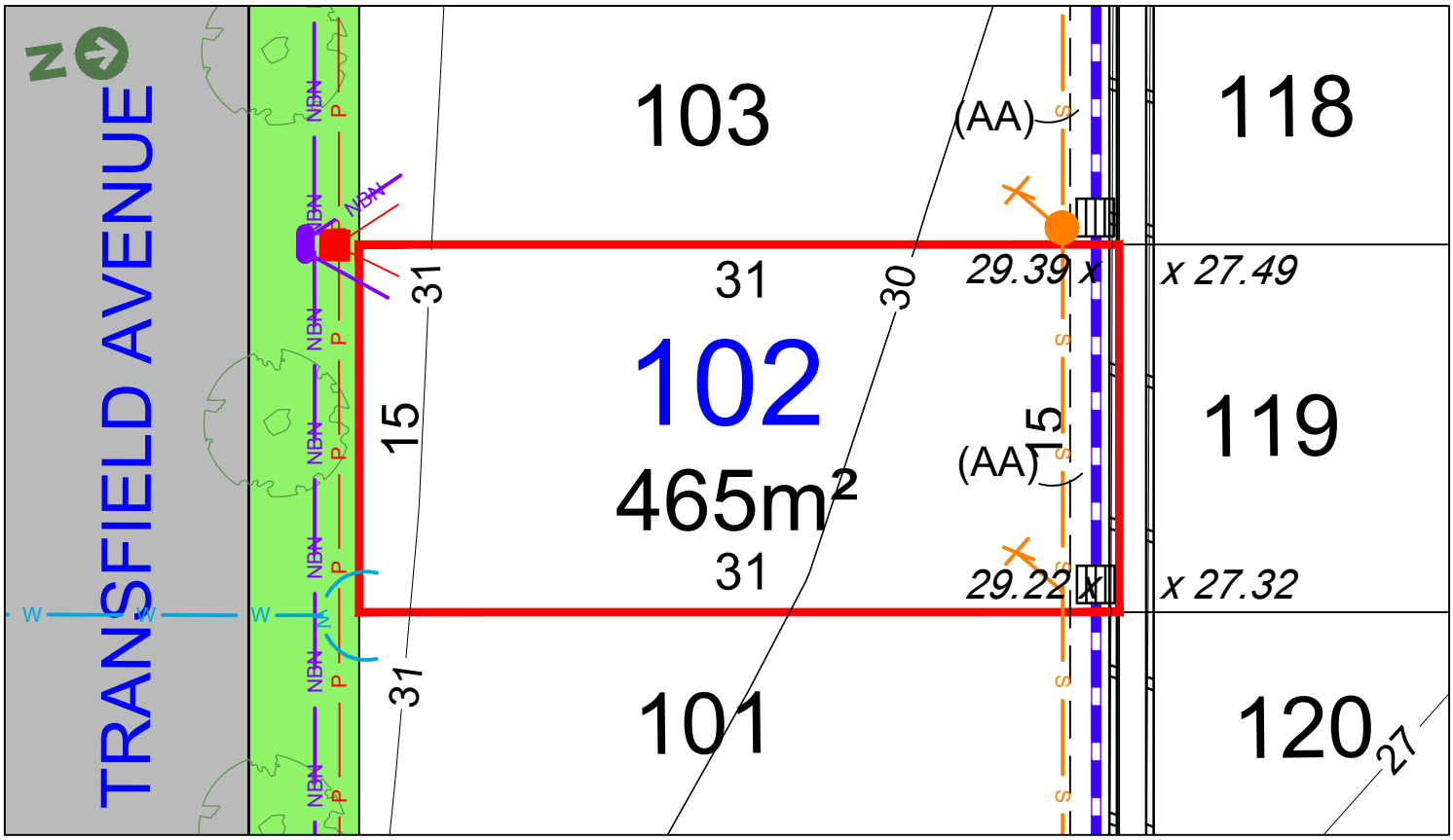

LEGEND:

- TELSTRA /NBN PIT
- HYDRANT
- STOP VALVE
- SEWER MANHOLE
- LP LIGHT POLE
- KERB INLET PIT
- STORMWATER PIT
- ELECTRICITY PILLAR
- ELECTRICAL SUBSTATION
- STREET TREES

- RETAINING WALLS
- STORMWATER PIPE
- SEWER JUNCTION
- S SEWER MAIN
- W WATER MAIN
- NBN TELSTRA /NBN
- P UNDER GROUND POWER

Anticipated Site Classification - H1 Class
(to be confirmed at completion of construction)

(EA) EASEMENT TO DRAIN WATER 1.5 WIDE

RESTRICTIONS ON USE OF LAND AFFECT THE LOT

DISCLAIMER/ NOTES:

1. Contours are based on finished design levels and are subject to construction and Council certification and therefore should not be considered as final or as-built.
2. Location of utility services including but not limited to power, water, sewer, communications and gas are subject to construction and Supply Authority certification and therefore should not be considered as final or as-built.
3. Survey information such as boundary dimensions and areas, easements etc are subject to Final Survey. Purchasers should refer to the Deposited Plan and 88B Instrument contained in the Contract for Sale of Land for further detailed information.
4. Bushfire and Geotechnical classification are provided for convenience. Purchasers should refer to referenced detail specialist reports.
5. This Preliminary Site Analysis Plan has been collated from various sources of design information and is provided for convenience to assist Purchasers in obtaining quotations/tenders for dwelling construction.
6. This document does not form part of the Contract of Sale of the Land.

REVISION/S:	HD27 STAGE 1 MARKETING r2
DATE:	8th MARCH 2019
BY:	HIGH DEFINITION DESIGN PTY LTD

LOT 103, TRANSFIELD AVENUE, EDGEWORTH

BRUSH CREEK
LAKE MACQUARIE

MASTER PLAN

STAGE PLAN

PRELIMINARY SITE ANALYSIS PLAN

SCALE 1:300 @ A4

0 5 10 15 20

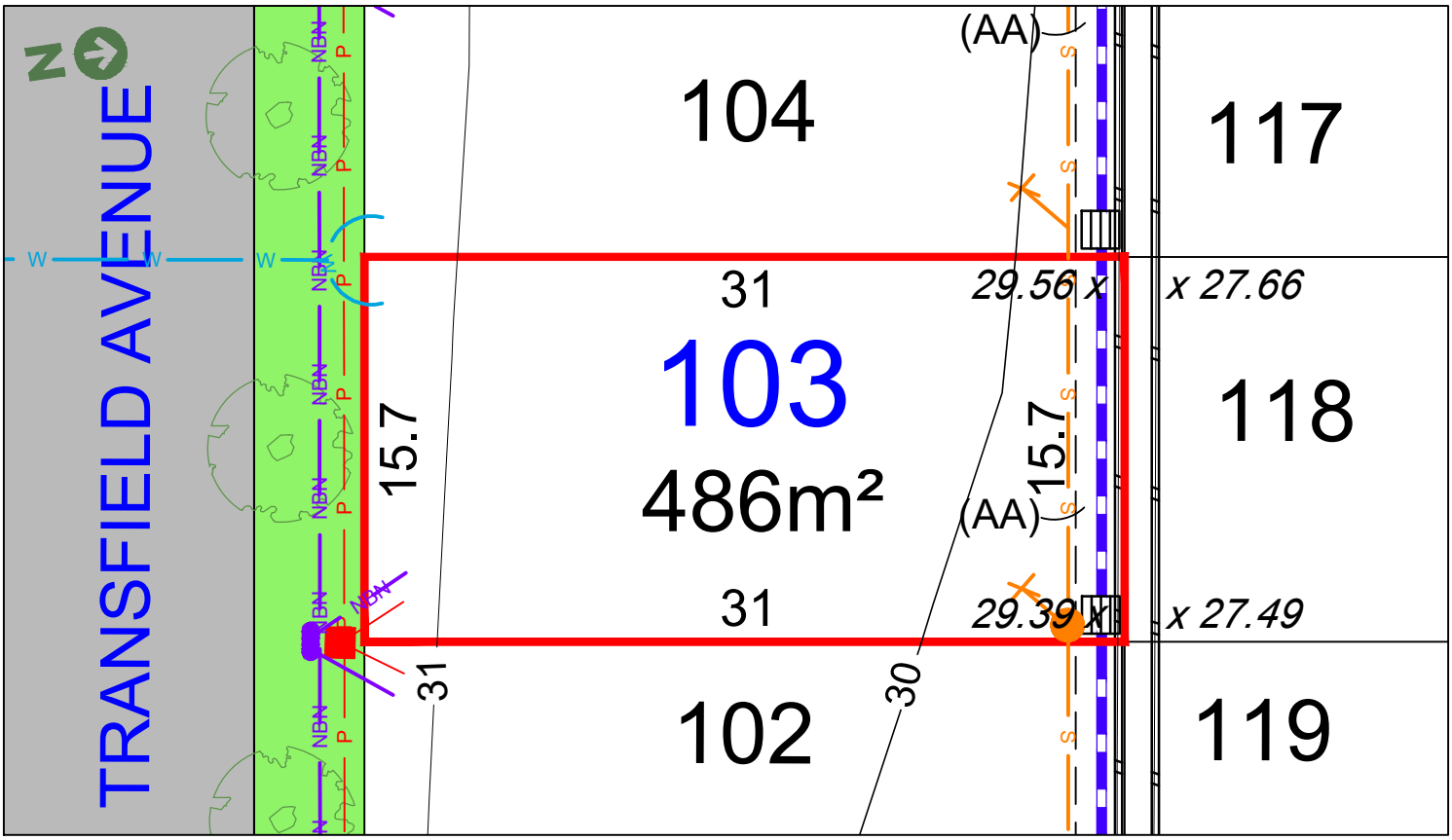

LEGEND:

- TELSTRA /NBN PIT
- HYDRANT
- STOP VALVE
- SEWER MANHOLE
- LP LIGHT POLE
- KERB INLET PIT
- STORMWATER PIT
- ELECTRICITY PILLAR
- ELECTRICAL SUBSTATION
- STREET TREES
- RETAINING WALLS
- STORMWATER PIPE
- SEWER JUNCTION
- S SEWER MAIN
- W WATER MAIN
- NBN TELSTRA /NBN
- P UNDER GROUND POWER

Anticipated Site Classification - H1 Class
(to be confirmed at completion of construction)

(AB) RESTRICTION ON THE USE OF LAND 0.7 WIDE
(AA) EASEMENT TO DRAIN WATER 2.0 WIDE

RESTRICTIONS ON USE OF LAND AFFECT THE LOT

DISCLAIMER/ NOTES:

1. Contours are based on finished design levels and are subject to construction and Council certification and therefore should not be considered as final or as-built.
2. Location of utility services including but not limited to power, water, sewer, communications and gas are subject to construction and Supply Authority certification and therefore should not be considered as final or as-built.
3. Survey information such as boundary dimensions and areas, easements etc are subject to Final Survey. Purchasers should refer to the Deposited Plan and 88B Instrument contained in the Contract for Sale of Land for further detailed information.
4. Bushfire and Geotechnical classification are provided for convenience. Purchasers should refer to referenced detail specialist reports.
5. This Preliminary Site Analysis Plan has been collated from various sources of design information and is provided for convenience to assist Purchasers in obtaining quotations/tenders for dwelling construction.
6. This document does not form part of the Contract of Sale of the Land.

REVISION/S:	HD27 STAGE 1 MARKETING r2
DATE:	8th MARCH 2019
BY:	HIGH DEFINITION DESIGN PTY LTD

LOT 104, TRANSFIELD AVENUE, EDGEWORTH

BRUSH CREEK
LAKE MACQUARIE

MASTER PLAN

STAGE PLAN

PRELIMINARY SITE ANALYSIS PLAN

SCALE 1:300 @ A4

0 5 10 15 20

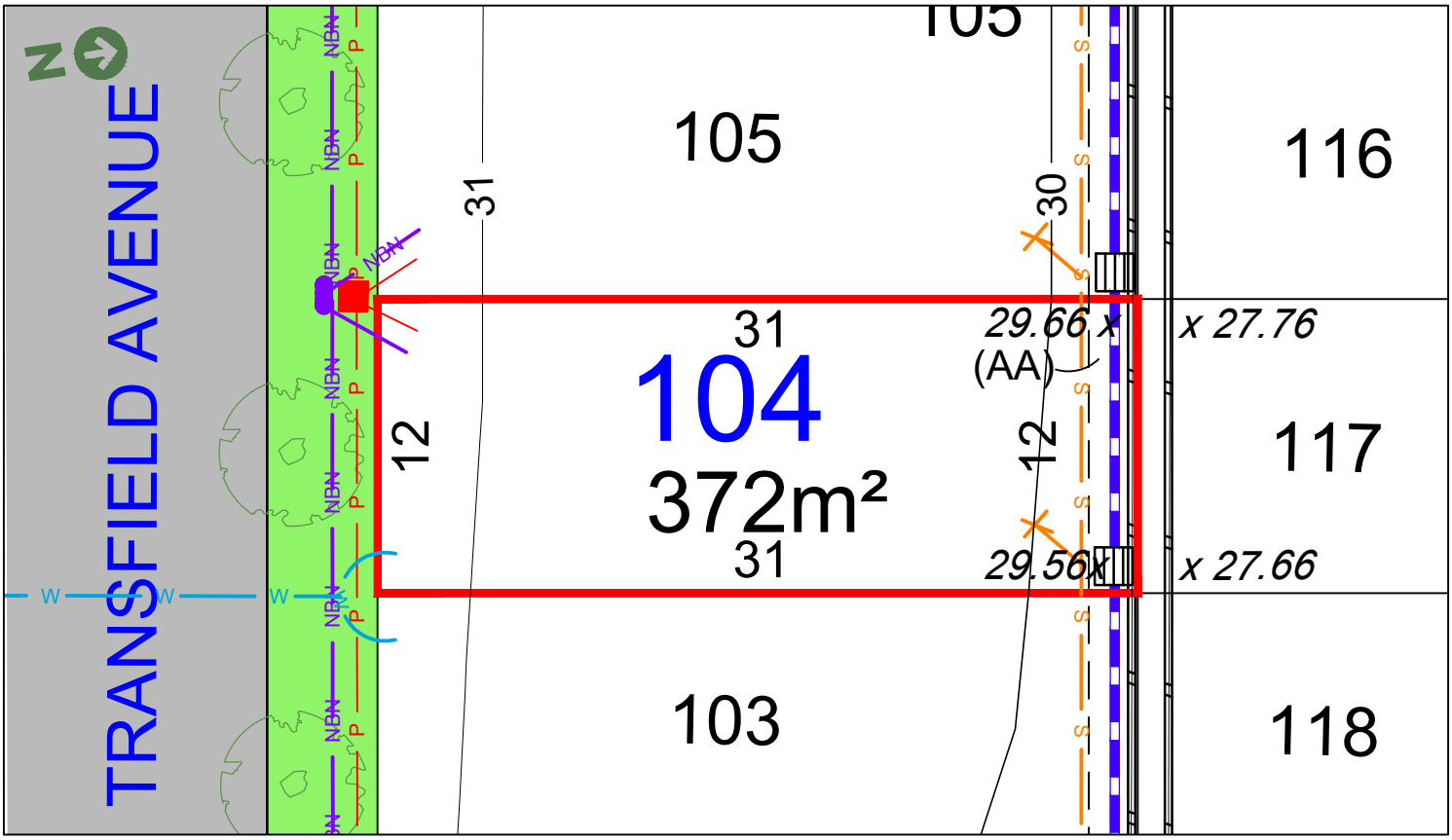

LEGEND:

- TELSTRA /NBN PIT
- HYDRANT
- STOP VALVE
- SEWER MANHOLE
- LIGHT POLE
- KERB INLET PIT
- STORMWATER PIT
- ELECTRICITY PILLAR
- ELECTRICAL SUBSTATION
- STREET TREES
- RETAINING WALLS
- STORMWATER PIPE
- SEWER JUNCTION
- SEWER MAIN
- WATER MAIN
- TELSTRA /NBN
- UNDER GROUND POWER

Anticipated Site Classification - H1 Class
(to be confirmed at completion of construction)

(AB) RESTRICTION ON THE USE OF LAND 0.7 WIDE
(AA) EASEMENT TO DRAIN WATER 2.0 WIDE

RESTRICTIONS ON USE OF LAND AFFECT THE LOT

DISCLAIMER/ NOTES:

1. Contours are based on finished design levels and are subject to construction and Council certification and therefore should not be considered as final or as-built.
2. Location of utility services including but not limited to power, water, sewer, communications and gas are subject to construction and Supply Authority certification and therefore should not be considered as final or as-built.
3. Survey information such as boundary dimensions and areas, easements etc are subject to Final Survey. Purchasers should refer to the Deposited Plan and 88B Instrument contained in the Contract for Sale of Land for further detailed information.
4. Bushfire and Geotechnical classification are provided for convenience. Purchasers should refer to referenced detail specialist reports.
5. This Preliminary Site Analysis Plan has been collated from various sources of design information and is provided for convenience to assist Purchasers in obtaining quotations/tenders for dwelling construction.
6. This document does not form part of the Contract of Sale of the Land.

REVISION/S:	HD27 STAGE 1 MARKETING r2
DATE:	8th MARCH 2019
BY:	HIGH DEFINITION DESIGN PTY LTD

LOT 105, TRANSFIELD AVENUE, EDGEWORTH

BRUSH CREEK
LAKE MACQUARIE

MASTER PLAN

STAGE PLAN

PRELIMINARY SITE ANALYSIS PLAN

SCALE 1:300 @ A4

0 5 10 15 20

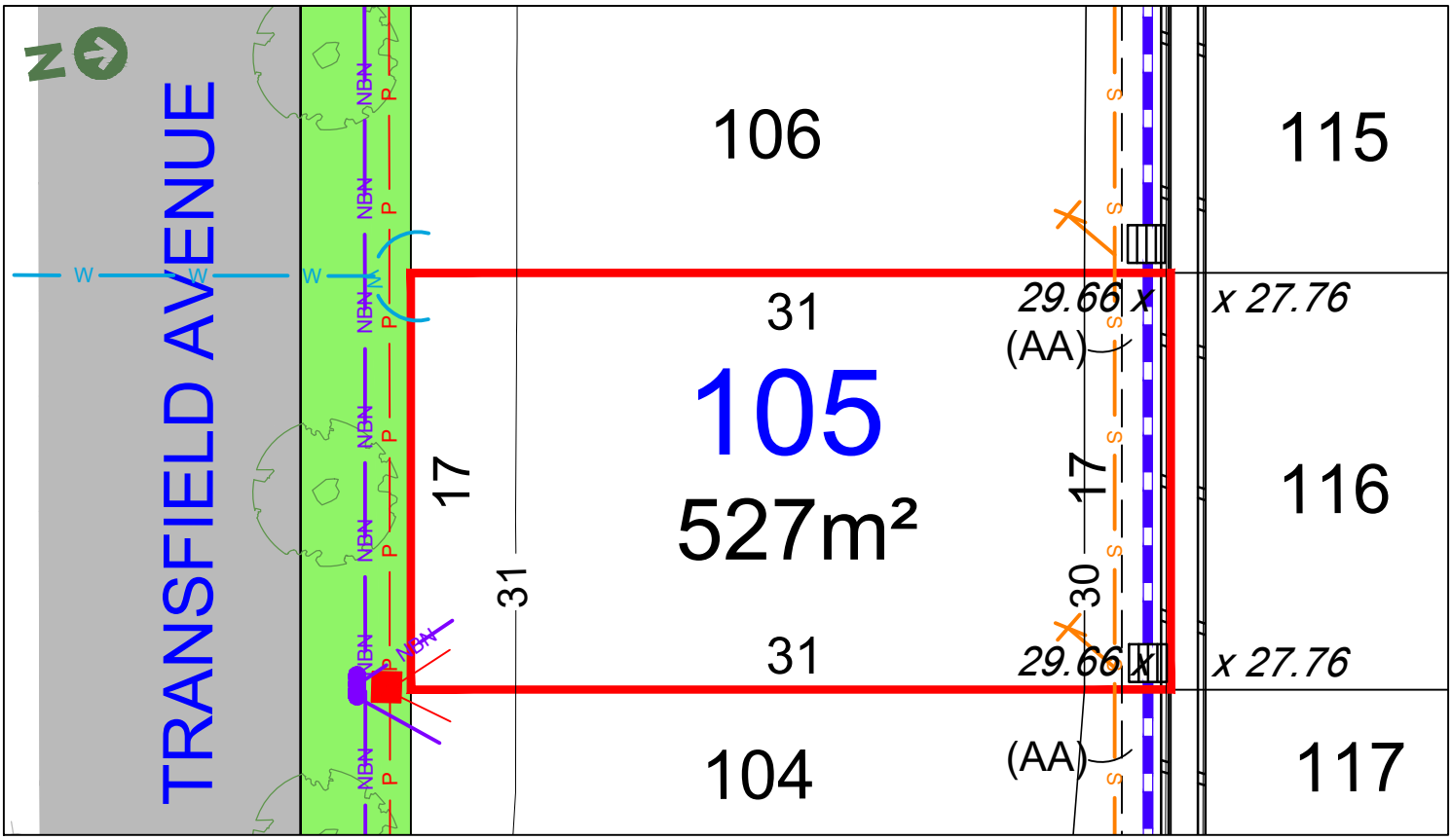

LEGEND:

- TELSTRA /NBN PIT
- HYDRANT
- STOP VALVE
- SEWER MANHOLE
- LP LIGHT POLE
- KERB INLET PIT
- STORMWATER PIT
- ELECTRICITY PILLAR
- ELECTRICAL SUBSTATION
- STREET TREES
- RETAINING WALLS
- STORMWATER PIPE
- SEWER JUNCTION
- S SEWER MAIN
- W WATER MAIN
- NBN TELSTRA /NBN
- P UNDER GROUND POWER

Anticipated Site Classification - H1 Class
(to be confirmed at completion of construction)

(AB) RESTRICTION ON THE USE OF LAND 0.7 WIDE
(AA) EASEMENT TO DRAIN WATER 2.0 WIDE

RESTRICTIONS ON USE OF LAND AFFECT THE LOT

DISCLAIMER/ NOTES:

1. Contours are based on finished design levels and are subject to construction and Council certification and therefore should not be considered as final or as-built.
2. Location of utility services including but not limited to power, water, sewer, communications and gas are subject to construction and Supply Authority certification and therefore should not be considered as final or as-built.
3. Survey information such as boundary dimensions and areas, easements etc are subject to Final Survey. Purchasers should refer to the Deposited Plan and 88B Instrument contained in the Contract for Sale of Land for further detailed information.
4. Bushfire and Geotechnical classification are provided for convenience. Purchasers should refer to referenced detail specialist reports.
5. This Preliminary Site Analysis Plan has been collated from various sources of design information and is provided for convenience to assist Purchasers in obtaining quotations/tenders for dwelling construction.
6. This document does not form part of the Contract of Sale of the Land.

REVISION/S:	HD27 STAGE 1 MARKETING r2
DATE:	8th MARCH 2019
BY:	HIGH DEFINITION DESIGN PTY LTD

LOT 106, TRANSFIELD AVENUE, EDGEWORTH

BRUSH CREEK
LAKE MACQUARIE

MASTER PLAN

STAGE PLAN

PRELIMINARY SITE ANALYSIS PLAN

SCALE 1:300 @ A4

0 5 10 15 20

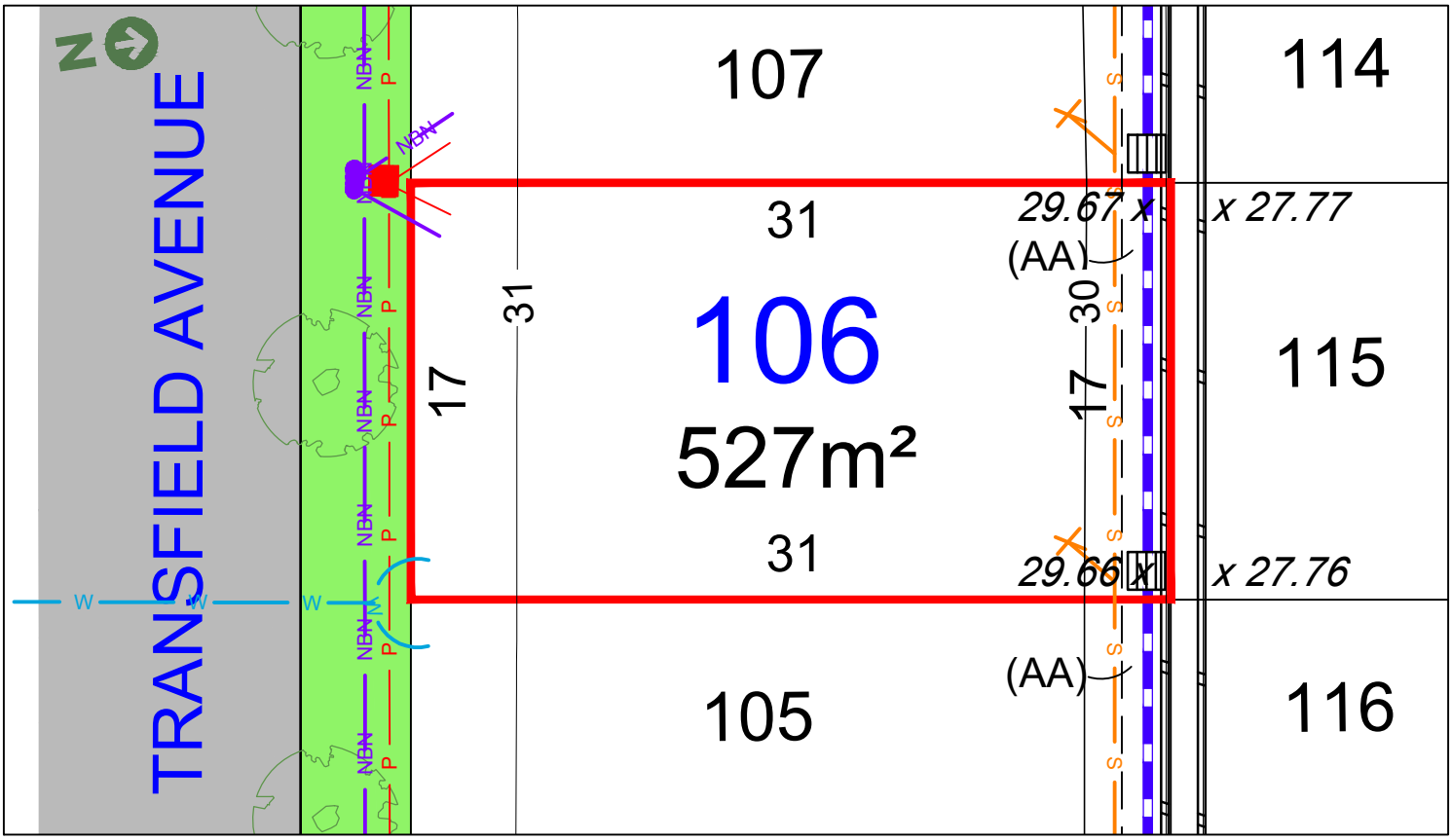

LEGEND:

- TELSTRA /NBN PIT
- HYDRANT
- STOP VALVE
- SEWER MANHOLE
- LP LIGHT POLE
- KERB INLET PIT
- STORMWATER PIT
- ELECTRICITY PILLAR
- ELECTRICAL SUBSTATION
- STREET TREES
- RETAINING WALLS
- STORMWATER PIPE
- SEWER JUNCTION
- S SEWER MAIN
- W WATER MAIN
- NBN TELSTRA /NBN
- P UNDER GROUND POWER

Anticipated Site Classification - H1 Class
(to be confirmed at completion of construction)

(AB) RESTRICTION ON THE USE OF LAND 0.7 WIDE
(AA) EASEMENT TO DRAIN WATER 2.0 WIDE

RESTRICTIONS ON USE OF LAND AFFECT THE LOT

DISCLAIMER/ NOTES:

1. Contours are based on finished design levels and are subject to construction and Council certification and therefore should not be considered as final or as-built.
2. Location of utility services including but not limited to power, water, sewer, communications and gas are subject to construction and Supply Authority certification and therefore should not be considered as final or as-built.
3. Survey information such as boundary dimensions and areas, easements etc are subject to Final Survey. Purchasers should refer to the Deposited Plan and 88B Instrument contained in the Contract for Sale of Land for further detailed information.
4. Bushfire and Geotechnical classification are provided for convenience. Purchasers should refer to referenced detail specialist reports.
5. This Preliminary Site Analysis Plan has been collated from various sources of design information and is provided for convenience to assist Purchasers in obtaining quotations/tenders for dwelling construction.
6. This document does not form part of the Contract of Sale of the Land.

REVISION/S:	HD27 STAGE 1 MARKETING r2
DATE:	8th MARCH 2019
BY:	HIGH DEFINITION DESIGN PTY LTD

LOT 107, TRANSFIELD AVENUE, EDGEWORTH

BRUSH CREEK
LAKE MACQUARIE

MASTER PLAN

STAGE PLAN

PRELIMINARY SITE ANALYSIS PLAN

SCALE 1:300 @ A4

0 5 10 15 20

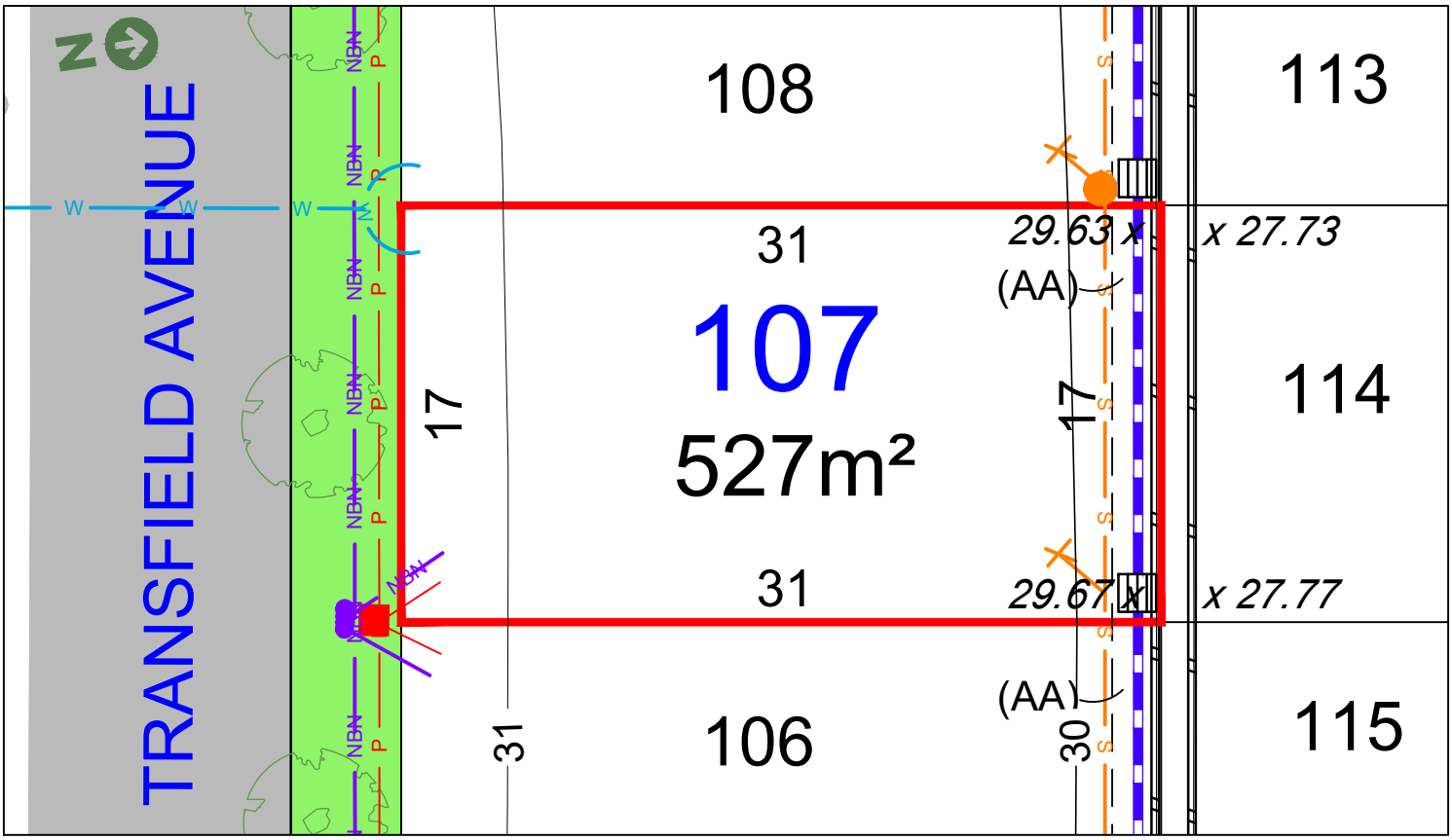

LEGEND:

- TELSTRA /NBN PIT
- HYDRANT
- STOP VALVE
- SEWER MANHOLE
- LP LIGHT POLE
- KERB INLET PIT
- STORMWATER PIT
- ELECTRICITY PILLAR
- ELECTRICAL SUBSTATION
- STREET TREES
- RETAINING WALLS
- STORMWATER PIPE
- SEWER JUNCTION
- S SEWER MAIN
- W WATER MAIN
- NBN TELSTRA /NBN
- P UNDER GROUND POWER

Anticipated Site Classification - H1 Class
(to be confirmed at completion of construction)

(AB) RESTRICTION ON THE USE OF LAND 0.7 WIDE
(AA) EASEMENT TO DRAIN WATER 2.0 WIDE

RESTRICTIONS ON USE OF LAND AFFECT THE LOT

DISCLAIMER/ NOTES:

1. Contours are based on finished design levels and are subject to construction and Council certification and therefore should not be considered as final or as-built.
2. Location of utility services including but not limited to power, water, sewer, communications and gas are subject to construction and Supply Authority certification and therefore should not be considered as final or as-built.
3. Survey information such as boundary dimensions and areas, easements etc are subject to Final Survey. Purchasers should refer to the Deposited Plan and 88B Instrument contained in the Contract for Sale of Land for further detailed information.
4. Bushfire and Geotechnical classification are provided for convenience. Purchasers should refer to referenced detail specialist reports.
5. This Preliminary Site Analysis Plan has been collated from various sources of design information and is provided for convenience to assist Purchasers in obtaining quotations/tenders for dwelling construction.
6. This document does not form part of the Contract of Sale of the Land.

REVISION/S:	HD27 STAGE 1 MARKETING r2
DATE:	8th MARCH 2019
BY:	HIGH DEFINITION DESIGN PTY LTD

LOT 108, TRANSFIELD AVENUE, EDGEWORTH

BRUSH CREEK
LAKE MACQUARIE

MASTER PLAN

STAGE PLAN

PRELIMINARY SITE ANALYSIS PLAN

SCALE 1:300 @ A4

0 5 10 15 20

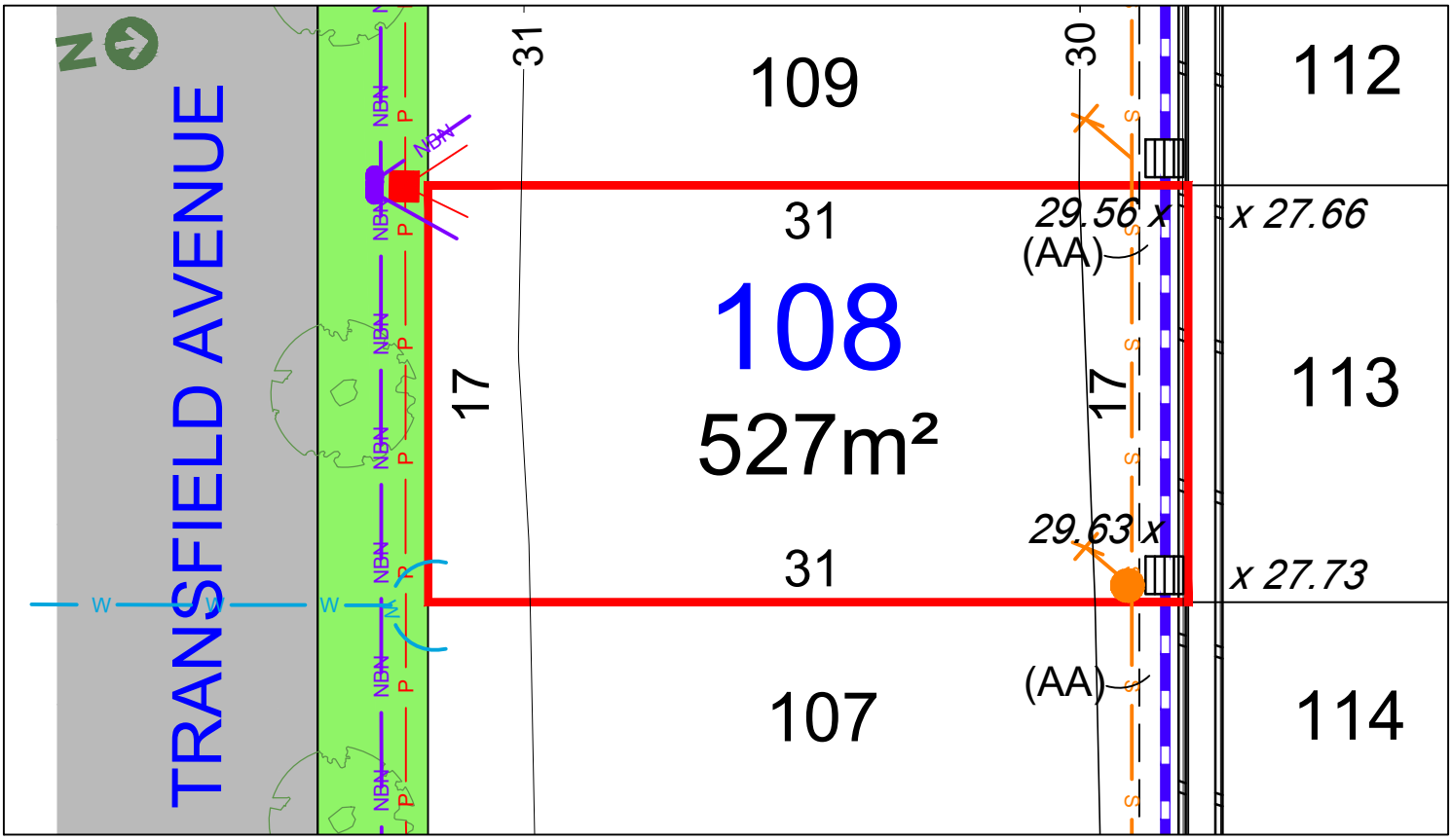

LEGEND:

- TELSTRA /NBN PIT
- HYDRANT
- STOP VALVE
- SEWER MANHOLE
- LP LIGHT POLE
- KERB INLET PIT
- STORMWATER PIT
- ELECTRICITY PILLAR
- ELECTRICAL SUBSTATION
- STREET TREES
- RETAINING WALLS
- STORMWATER PIPE
- SEWER JUNCTION
- S SEWER MAIN
- W WATER MAIN
- NBN TELSTRA /NBN
- P UNDER GROUND POWER

Anticipated Site Classification - H1 Class
(to be confirmed at completion of construction)

(AB) RESTRICTION ON THE USE OF LAND 0.7 WIDE
(AA) EASEMENT TO DRAIN WATER 2.0 WIDE

RESTRICTIONS ON USE OF LAND AFFECT THE LOT

DISCLAIMER/ NOTES:

1. Contours are based on finished design levels and are subject to construction and Council certification and therefore should not be considered as final or as-built.
2. Location of utility services including but not limited to power, water, sewer, communications and gas are subject to construction and Supply Authority certification and therefore should not be considered as final or as-built.
3. Survey information such as boundary dimensions and areas, easements etc are subject to Final Survey. Purchasers should refer to the Deposited Plan and 88B Instrument contained in the Contract for Sale of Land for further detailed information.
4. Bushfire and Geotechnical classification are provided for convenience. Purchasers should refer to referenced detail specialist reports.
5. This Preliminary Site Analysis Plan has been collated from various sources of design information and is provided for convenience to assist Purchasers in obtaining quotations/tenders for dwelling construction.
6. This document does not form part of the Contract of Sale of the Land.

REVISION/S:	HD27 STAGE 1 MARKETING r2
DATE:	8th MARCH 2019
BY:	HIGH DEFINITION DESIGN PTY LTD

LOT 109, TRANSFIELD AVENUE, EDGEWORTH

BRUSH CREEK
LAKE MACQUARIE

MASTER PLAN

STAGE PLAN

PRELIMINARY SITE ANALYSIS PLAN

SCALE 1:300 @ A4

0 5 10 15 20

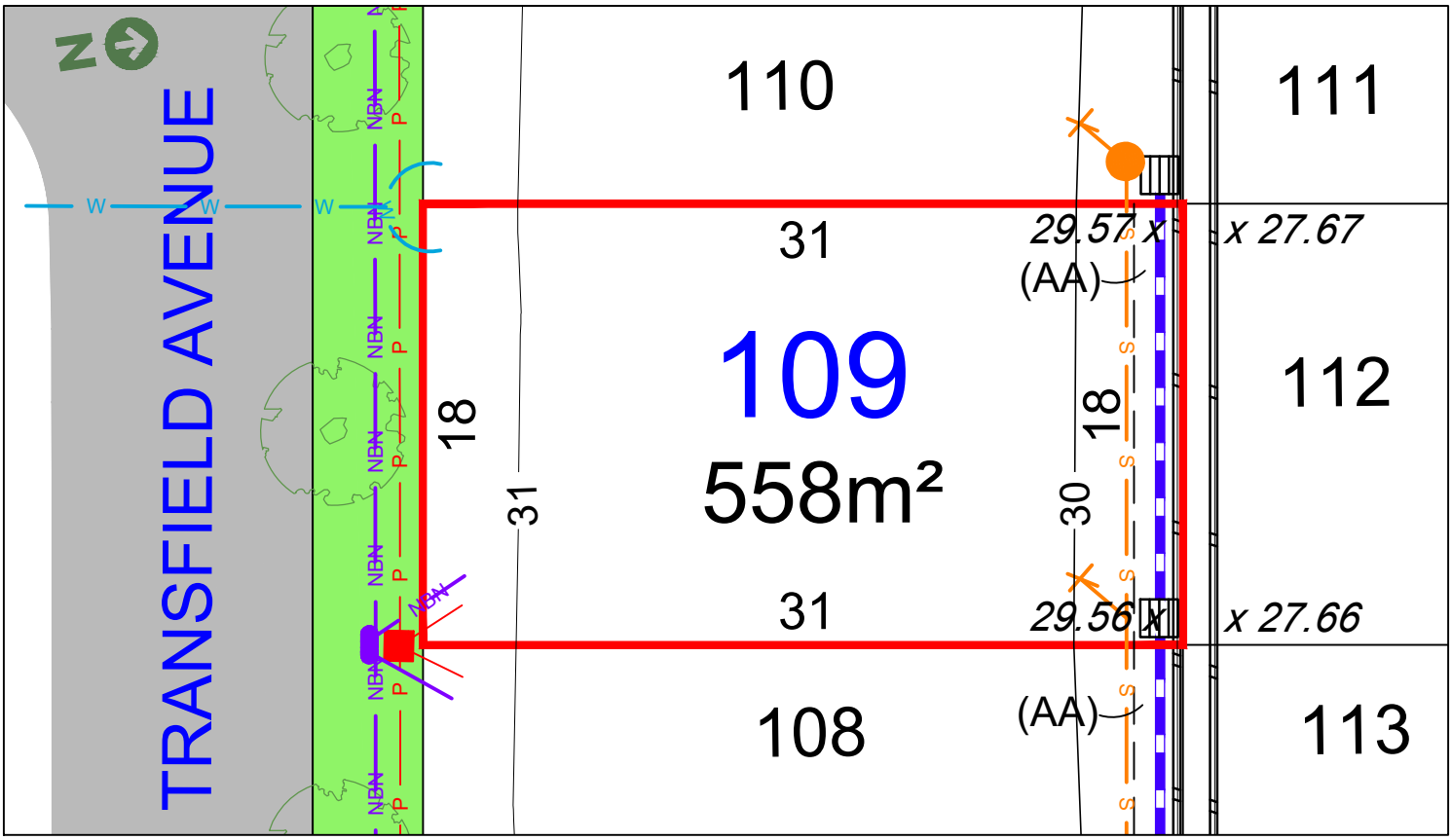

LEGEND:

- TELSTRA /NBN PIT
- HYDRANT
- STOP VALVE
- SEWER MANHOLE
- LP LIGHT POLE
- KERB INLET PIT
- STORMWATER PIT
- ELECTRICITY PILLAR
- ELECTRICAL SUBSTATION
- STREET TREES
- RETAINING WALLS
- STORMWATER PIPE
- SEWER JUNCTION
- S SEWER MAIN
- W WATER MAIN
- NBN TELSTRA /NBN
- P UNDER GROUND POWER

Anticipated Site Classification - H1 Class
(to be confirmed at completion of construction)

(AB) RESTRICTION ON THE USE OF LAND 0.7 WIDE
(AA) EASEMENT TO DRAIN WATER 2.0 WIDE

RESTRICTIONS ON USE OF LAND AFFECT THE LOT

DISCLAIMER/ NOTES:

1. Contours are based on finished design levels and are subject to construction and Council certification and therefore should not be considered as final or as-built.
2. Location of utility services including but not limited to power, water, sewer, communications and gas are subject to construction and Supply Authority certification and therefore should not be considered as final or as-built.
3. Survey information such as boundary dimensions and areas, easements etc are subject to Final Survey. Purchasers should refer to the Deposited Plan and 88B Instrument contained in the Contract for Sale of Land for further detailed information.
4. Bushfire and Geotechnical classification are provided for convenience. Purchasers should refer to referenced detail specialist reports.
5. This Preliminary Site Analysis Plan has been collated from various sources of design information and is provided for convenience to assist Purchasers in obtaining quotations/tenders for dwelling construction.
6. This document does not form part of the Contract of Sale of the Land.

REVISION/S:	HD27 STAGE 1 MARKETING r2
DATE:	8th MARCH 2019
BY:	HIGH DEFINITION DESIGN PTY LTD

LOT 110, TRANSFIELD AVENUE, EDGEWORTH

BRUSH CREEK
LAKE MACQUARIE

MASTER PLAN

STAGE PLAN

PRELIMINARY SITE ANALYSIS PLAN

SCALE 1:300 @ A4

0 5 10 15 20

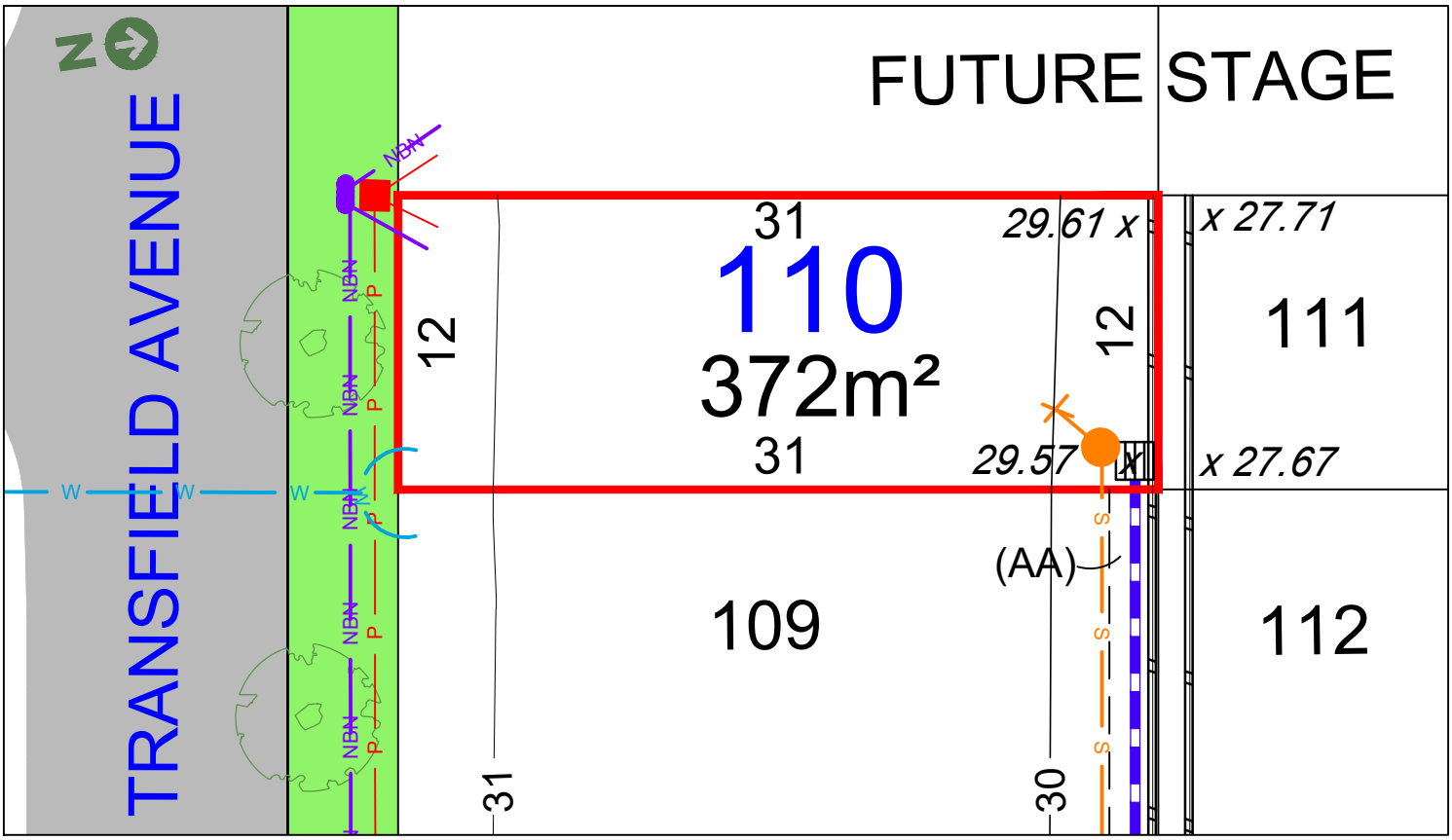

LEGEND:

- TELSTRA /NBN PIT
- HYDRANT
- STOP VALVE
- SEWER MANHOLE
- LP LIGHT POLE
- KERB INLET PIT
- STORMWATER PIT
- ELECTRICITY PILLAR
- ELECTRICAL SUBSTATION
- STREET TREES
- RETAINING WALLS
- STORMWATER PIPE
- SEWER JUNCTION
- S SEWER MAIN
- W WATER MAIN
- NBN TELSTRA /NBN
- P UNDER GROUND POWER

Anticipated Site Classification - H1 Class
(to be confirmed at completion of construction)

(AB) RESTRICTION ON THE USE OF LAND 0.7 WIDE
(AA) EASEMENT TO DRAIN WATER 2.0 WIDE

RESTRICTIONS ON USE OF LAND AFFECT THE LOT

DISCLAIMER/ NOTES:

1. Contours are based on finished design levels and are subject to construction and Council certification and therefore should not be considered as final or as-built.
2. Location of utility services including but not limited to power, water, sewer, communications and gas are subject to construction and Supply Authority certification and therefore should not be considered as final or as-built.
3. Survey information such as boundary dimensions and areas, easements etc are subject to Final Survey. Purchasers should refer to the Deposited Plan and 88B Instrument contained in the Contract for Sale of Land for further detailed information.
4. Bushfire and Geotechnical classification are provided for convenience. Purchasers should refer to referenced detail specialist reports.
5. This Preliminary Site Analysis Plan has been collated from various sources of design information and is provided for convenience to assist Purchasers in obtaining quotations/tenders for dwelling construction.
6. This document does not form part of the Contract of Sale of the Land.

REVISION/S:	HD27 STAGE 1 MARKETING r2
DATE:	8th MARCH 2019
BY:	HIGH DEFINITION DESIGN PTY LTD

LOT 111, ROAD 3, EDGEWORTH

BRUSH CREEK
LAKE MACQUARIE

MASTER PLAN

STAGE PLAN

PRELIMINARY SITE ANALYSIS PLAN

SCALE 1:300 @ A4

0 5 10 15 20

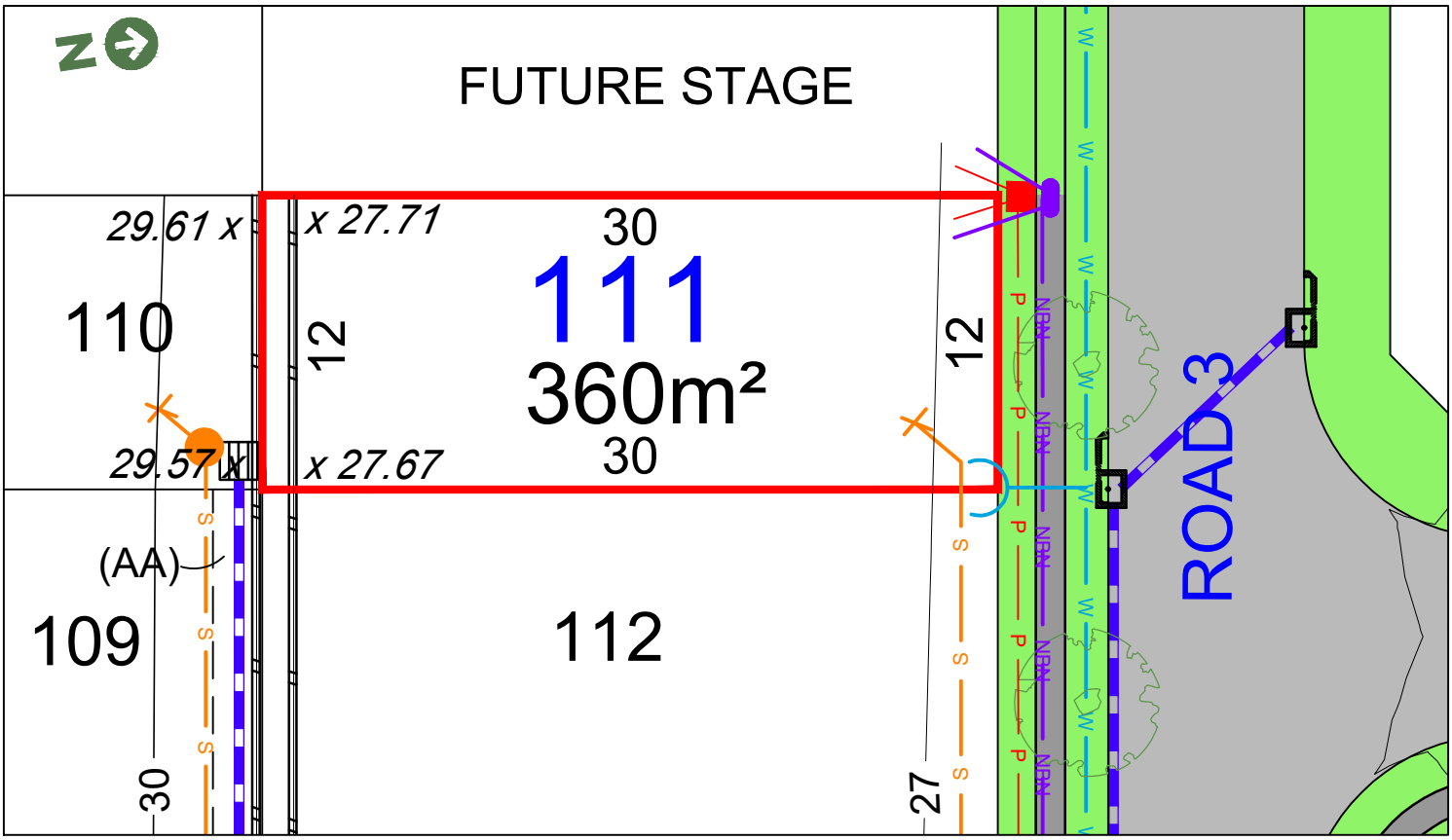

LEGEND:

- TELSTRA /NBN PIT
- HYDRANT
- STOP VALVE
- SEWER MANHOLE
- LP LIGHT POLE
- KERB INLET PIT
- STORMWATER PIT
- ELECTRICITY PILLAR
- ELECTRICAL SUBSTATION
- STREET TREES
- RETAINING WALLS
- STORMWATER PIPE
- SEWER JUNCTION
- S SEWER MAIN
- W WATER MAIN
- NBN TELSTRA /NBN
- P UNDER GROUND POWER

Anticipated Site Classification - H1 Class
(to be confirmed at completion of construction)

(AB) RESTRICTION ON THE USE OF LAND 0.7 WIDE
(AA) EASEMENT TO DRAIN WATER 2.0 WIDE

RESTRICTIONS ON USE OF LAND AFFECT THE LOT

DISCLAIMER/ NOTES:

1. Contours are based on finished design levels and are subject to construction and Council certification and therefore should not be considered as final or as-built.
2. Location of utility services including but not limited to power, water, sewer, communications and gas are subject to construction and Supply Authority certification and therefore should not be considered as final or as-built.
3. Survey information such as boundary dimensions and areas, easements etc are subject to Final Survey. Purchasers should refer to the Deposited Plan and 88B Instrument contained in the Contract for Sale of Land for further detailed information.
4. Bushfire and Geotechnical classification are provided for convenience. Purchasers should refer to referenced detail specialist reports.
5. This Preliminary Site Analysis Plan has been collated from various sources of design information and is provided for convenience to assist Purchasers in obtaining quotations/tenders for dwelling construction.
6. This document does not form part of the Contract of Sale of the Land.

REVISION/S:	HD27 STAGE 1 MARKETING r2
DATE:	8th MARCH 2019
BY:	HIGH DEFINITION DESIGN PTY LTD

LOT 112, ROAD 3, EDGEWORTH

BRUSH CREEK
LAKE MACQUARIE

MASTER PLAN

STAGE PLAN

PRELIMINARY SITE ANALYSIS PLAN

SCALE 1:300 @ A4

0 5 10 15 20

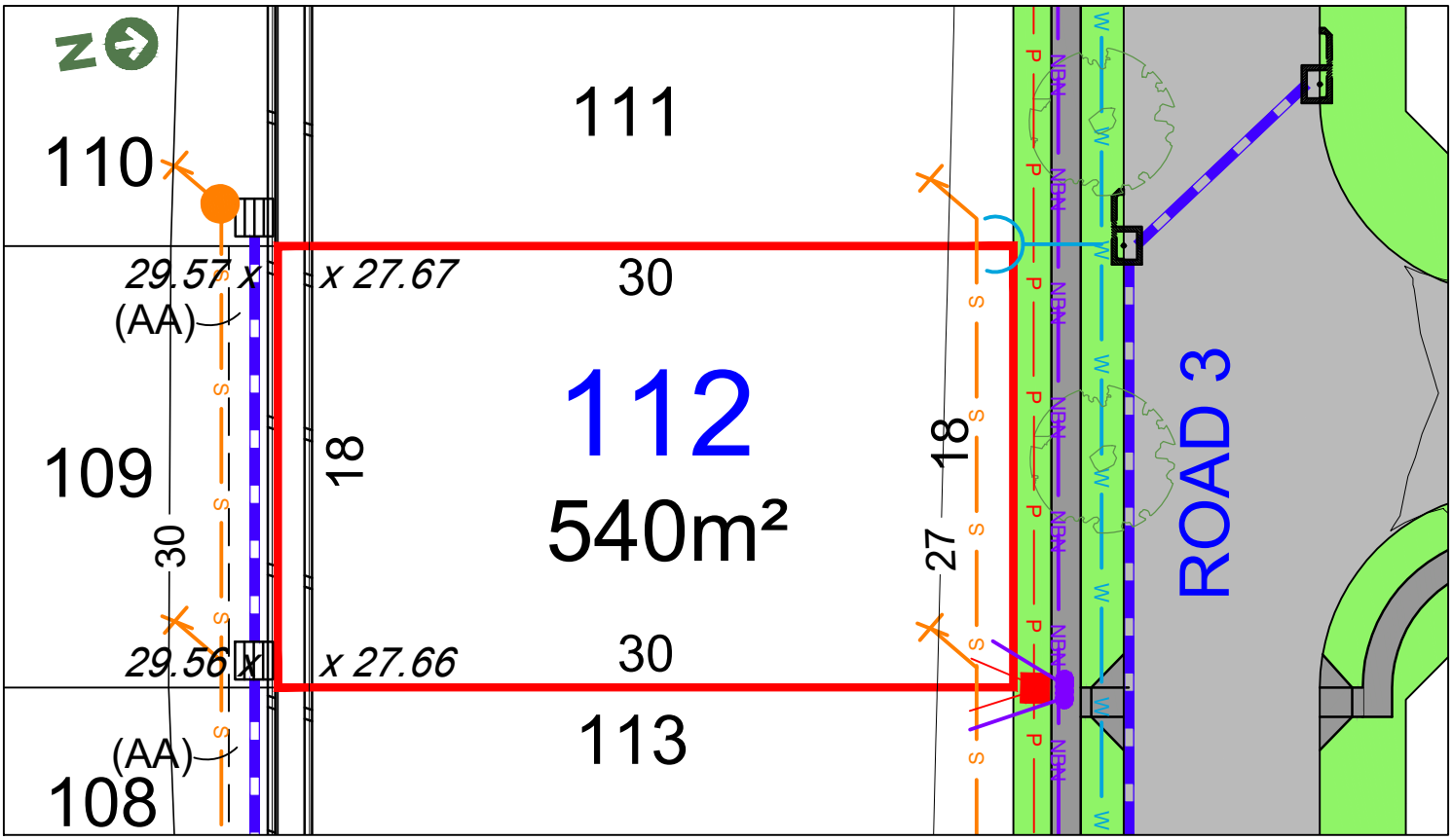

LEGEND:

- TELSTRA /NBN PIT
- HYDRANT
- STOP VALVE
- SEWER MANHOLE
- LP LIGHT POLE
- KERB INLET PIT
- STORMWATER PIT
- ELECTRICITY PILLAR
- ELECTRICAL SUBSTATION
- STREET TREES
- RETAINING WALLS
- STORMWATER PIPE
- SEWER JUNCTION
- S SEWER MAIN
- W WATER MAIN
- NBN TELSTRA /NBN
- P UNDER GROUND POWER

Anticipated Site Classification - H1 Class
(to be confirmed at completion of construction)

(AB) RESTRICTION ON THE USE OF LAND 0.7 WIDE
(AA) EASEMENT TO DRAIN WATER 2.0 WIDE

RESTRICTIONS ON USE OF LAND AFFECT THE LOT

DISCLAIMER/ NOTES:

1. Contours are based on finished design levels and are subject to construction and Council certification and therefore should not be considered as final or as-built.
2. Location of utility services including but not limited to power, water, sewer, communications and gas are subject to construction and Supply Authority certification and therefore should not be considered as final or as-built.
3. Survey information such as boundary dimensions and areas, easements etc are subject to Final Survey. Purchasers should refer to the Deposited Plan and 88B Instrument contained in the Contract for Sale of Land for further detailed information.
4. Bushfire and Geotechnical classification are provided for convenience. Purchasers should refer to referenced detail specialist reports.
5. This Preliminary Site Analysis Plan has been collated from various sources of design information and is provided for convenience to assist Purchasers in obtaining quotations/tenders for dwelling construction.
6. This document does not form part of the Contract of Sale of the Land.

REVISION/S:	HD27 STAGE 1 MARKETING r2
DATE:	8th MARCH 2019
BY:	HIGH DEFINITION DESIGN PTY LTD

LOT 113, ROAD 3, EDGEWORTH

BRUSH CREEK
LAKE MACQUARIE

MASTER PLAN

STAGE PLAN

PRELIMINARY SITE ANALYSIS PLAN

SCALE 1:300 @ A4

0 5 10 15 20

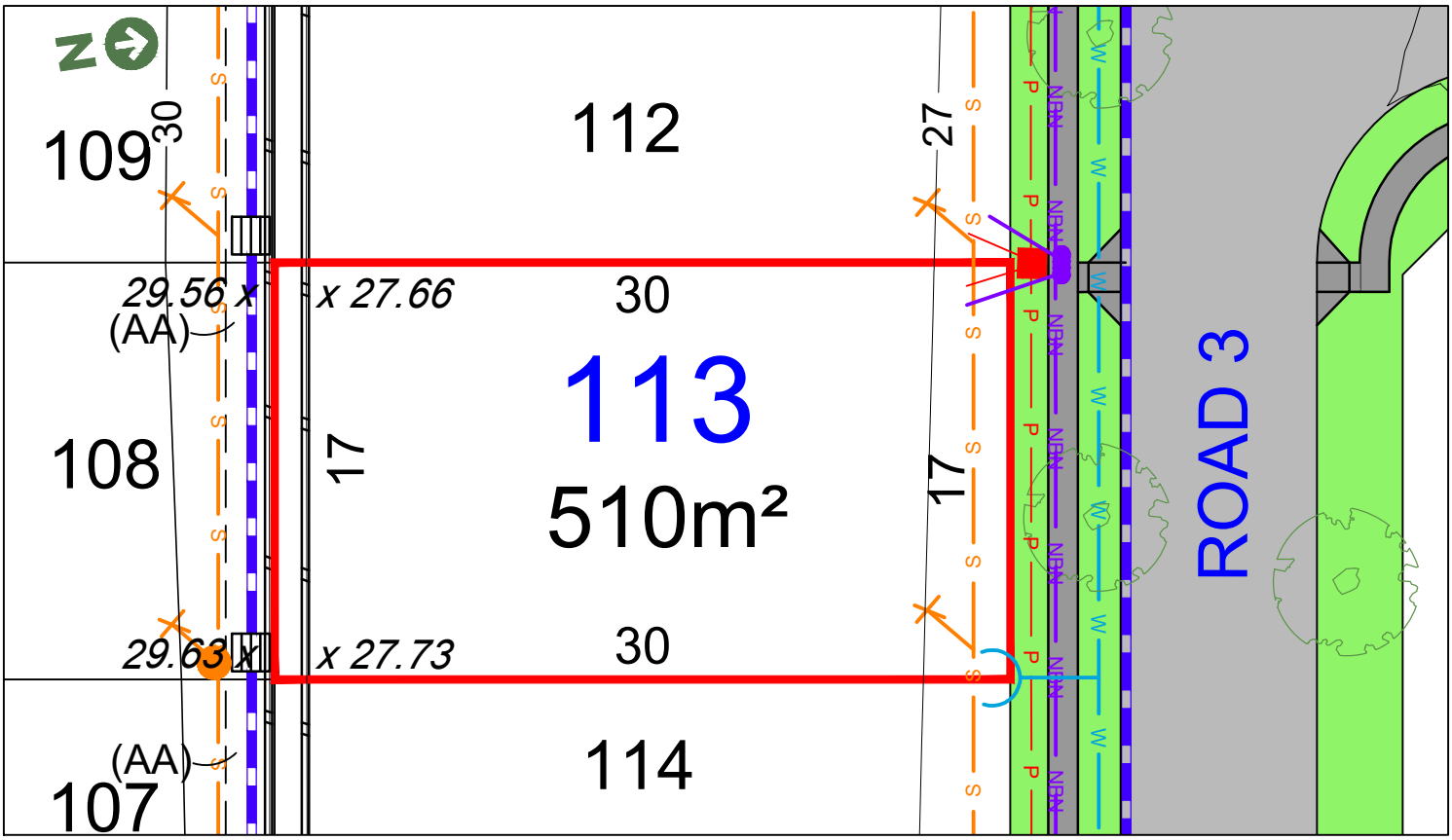

LEGEND:

- TELSTRA /NBN PIT
- HYDRANT
- STOP VALVE
- SEWER MANHOLE
- LP LIGHT POLE
- KERB INLET PIT
- STORMWATER PIT
- ELECTRICITY PILLAR
- ELECTRICAL SUBSTATION
- STREET TREES
- RETAINING WALLS
- STORMWATER PIPE
- SEWER JUNCTION
- S SEWER MAIN
- W WATER MAIN
- NBN TELSTRA /NBN
- P UNDER GROUND POWER

Anticipated Site Classification - H1 Class
(to be confirmed at completion of construction)

(AB) RESTRICTION ON THE USE OF LAND 0.7 WIDE
(AA) EASEMENT TO DRAIN WATER 2.0 WIDE

RESTRICTIONS ON USE OF LAND AFFECT THE LOT

DISCLAIMER/ NOTES:

1. Contours are based on finished design levels and are subject to construction and Council certification and therefore should not be considered as final or as-built.
2. Location of utility services including but not limited to power, water, sewer, communications and gas are subject to construction and Supply Authority certification and therefore should not be considered as final or as-built.
3. Survey information such as boundary dimensions and areas, easements etc are subject to Final Survey. Purchasers should refer to the Deposited Plan and 88B Instrument contained in the Contract for Sale of Land for further detailed information.
4. Bushfire and Geotechnical classification are provided for convenience. Purchasers should refer to referenced detail specialist reports.
5. This Preliminary Site Analysis Plan has been collated from various sources of design information and is provided for convenience to assist Purchasers in obtaining quotations/tenders for dwelling construction.
6. This document does not form part of the Contract of Sale of the Land.

REVISION/S:	HD27 STAGE 1 MARKETING r2
DATE:	8th MARCH 2019
BY:	HIGH DEFINITION DESIGN PTY LTD

LOT 114, ROAD 3, EDGEWORTH

BRUSH CREEK
LAKE MACQUARIE

MASTER PLAN

STAGE PLAN

PRELIMINARY SITE ANALYSIS PLAN

SCALE 1:300 @ A4

0 5 10 15 20

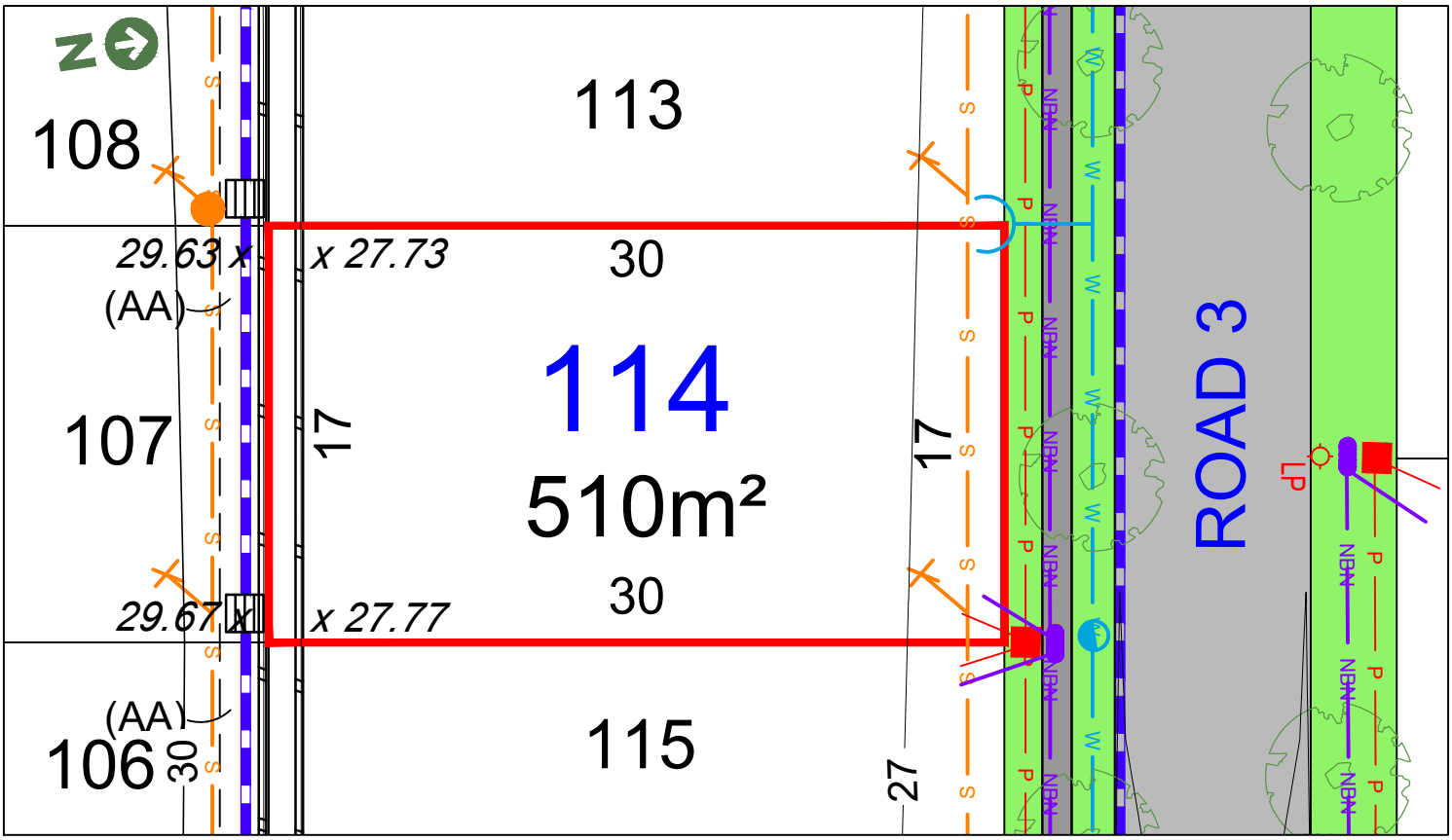

LEGEND:

- TELSTRA /NBN PIT
- HYDRANT
- STOP VALVE
- SEWER MANHOLE
- LP LIGHT POLE
- KERB INLET PIT
- STORMWATER PIT
- ELECTRICITY PILLAR
- ELECTRICAL SUBSTATION
- STREET TREES
- RETAINING WALLS
- STORMWATER PIPE
- SEWER JUNCTION
- S SEWER MAIN
- W WATER MAIN
- NBN TELSTRA /NBN
- P UNDER GROUND POWER

Anticipated Site Classification - H1 Class
(to be confirmed at completion of construction)

(AB) RESTRICTION ON THE USE OF LAND 0.7 WIDE
(AA) EASEMENT TO DRAIN WATER 2.0 WIDE

RESTRICTIONS ON USE OF LAND AFFECT THE LOT

DISCLAIMER/ NOTES:

1. Contours are based on finished design levels and are subject to construction and Council certification and therefore should not be considered as final or as-built.
2. Location of utility services including but not limited to power, water, sewer, communications and gas are subject to construction and Supply Authority certification and therefore should not be considered as final or as-built.
3. Survey information such as boundary dimensions and areas, easements etc are subject to Final Survey. Purchasers should refer to the Deposited Plan and 88B Instrument contained in the Contract for Sale of Land for further detailed information.
4. Bushfire and Geotechnical classification are provided for convenience. Purchasers should refer to referenced detail specialist reports.
5. This Preliminary Site Analysis Plan has been collated from various sources of design information and is provided for convenience to assist Purchasers in obtaining quotations/tenders for dwelling construction.
6. This document does not form part of the Contract of Sale of the Land.

REVISION/S:	HD27 STAGE 1 MARKETING r2
DATE:	8th MARCH 2019
BY:	HIGH DEFINITION DESIGN PTY LTD

LOT 115, ROAD 3, EDGEWORTH

BRUSH CREEK
LAKE MACQUARIE

MASTER PLAN

STAGE PLAN

PRELIMINARY SITE ANALYSIS PLAN

SCALE 1:300 @ A4

0 5 10 15 20

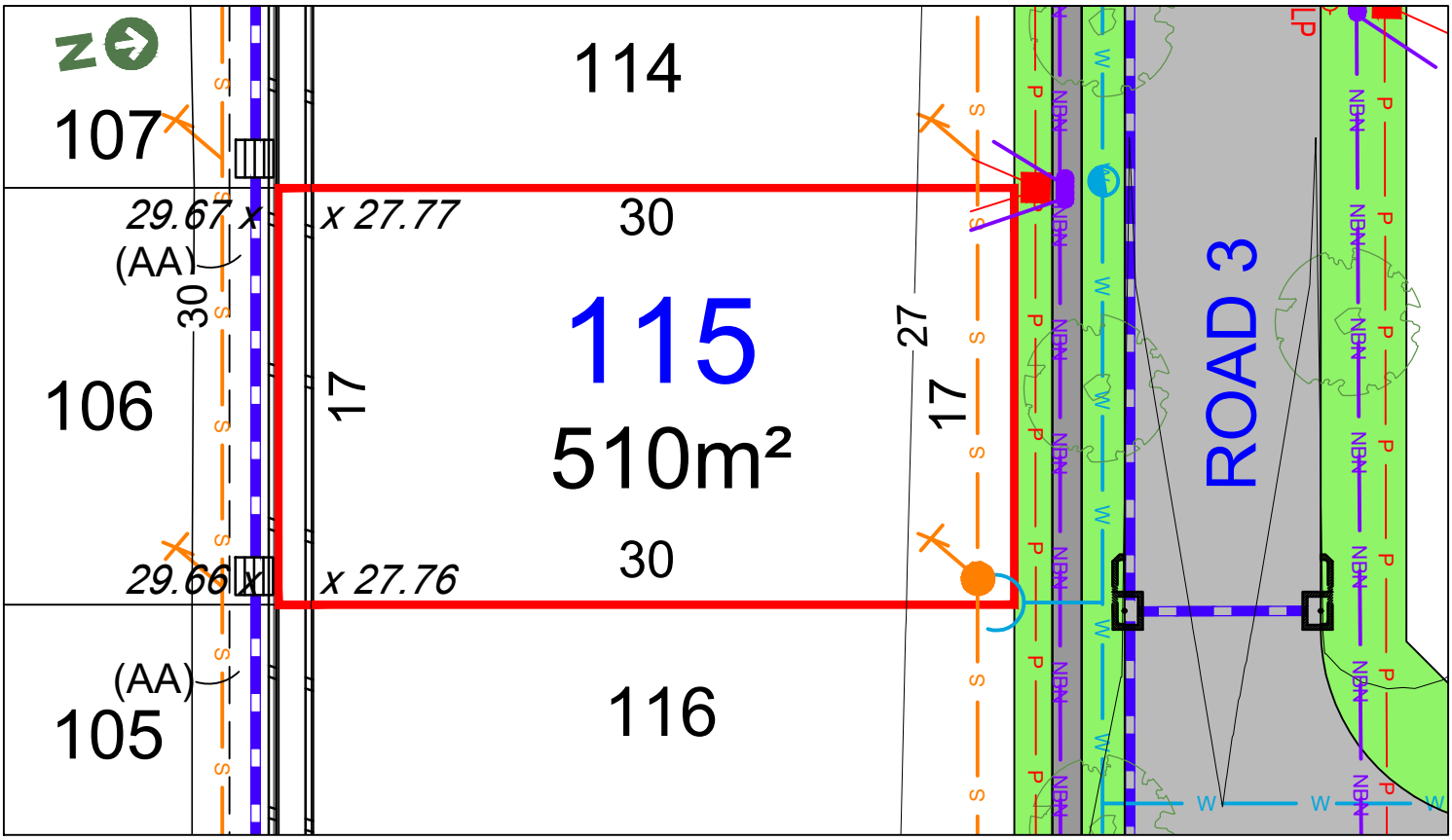

LEGEND:

- TELSTRA /NBN PIT
- HYDRANT
- STOP VALVE
- SEWER MANHOLE
- LIGHT POLE
- KERB INLET PIT
- STORMWATER PIT
- ELECTRICITY PILLAR
- ELECTRICAL SUBSTATION
- STREET TREES
- RETAINING WALLS
- STORMWATER PIPE
- SEWER JUNCTION
- S — SEWER MAIN
- W — WATER MAIN
- NBN — TELSTRA /NBN
- P — UNDER GROUND POWER

Anticipated Site Classification - H1 Class
(to be confirmed at completion of construction)

(AB) RESTRICTION ON THE USE OF LAND 0.7 WIDE
(AA) EASEMENT TO DRAIN WATER 2.0 WIDE

RESTRICTIONS ON USE OF LAND AFFECT THE LOT

DISCLAIMER/ NOTES:

1. Contours are based on finished design levels and are subject to construction and Council certification and therefore should not be considered as final or as-built.
2. Location of utility services including but not limited to power, water, sewer, communications and gas are subject to construction and Supply Authority certification and therefore should not be considered as final or as-built.
3. Survey information such as boundary dimensions and areas, easements etc are subject to Final Survey. Purchasers should refer to the Deposited Plan and 88B Instrument contained in the Contract for Sale of Land for further detailed information.
4. Bushfire and Geotechnical classification are provided for convenience. Purchasers should refer to referenced detail specialist reports.
5. This Preliminary Site Analysis Plan has been collated from various sources of design information and is provided for convenience to assist Purchasers in obtaining quotations/tenders for dwelling construction.
6. This document does not form part of the Contract of Sale of the Land.

REVISION/S:	HD27 STAGE 1 MARKETING r2
DATE:	8th MARCH 2019
BY:	HIGH DEFINITION DESIGN PTY LTD

LOT 116, ROAD 3, EDGEWORTH

BRUSH CREEK
LAKE MACQUARIE

MASTER PLAN

STAGE PLAN

PRELIMINARY SITE ANALYSIS PLAN

SCALE 1:300 @ A4

0 5 10 15 20

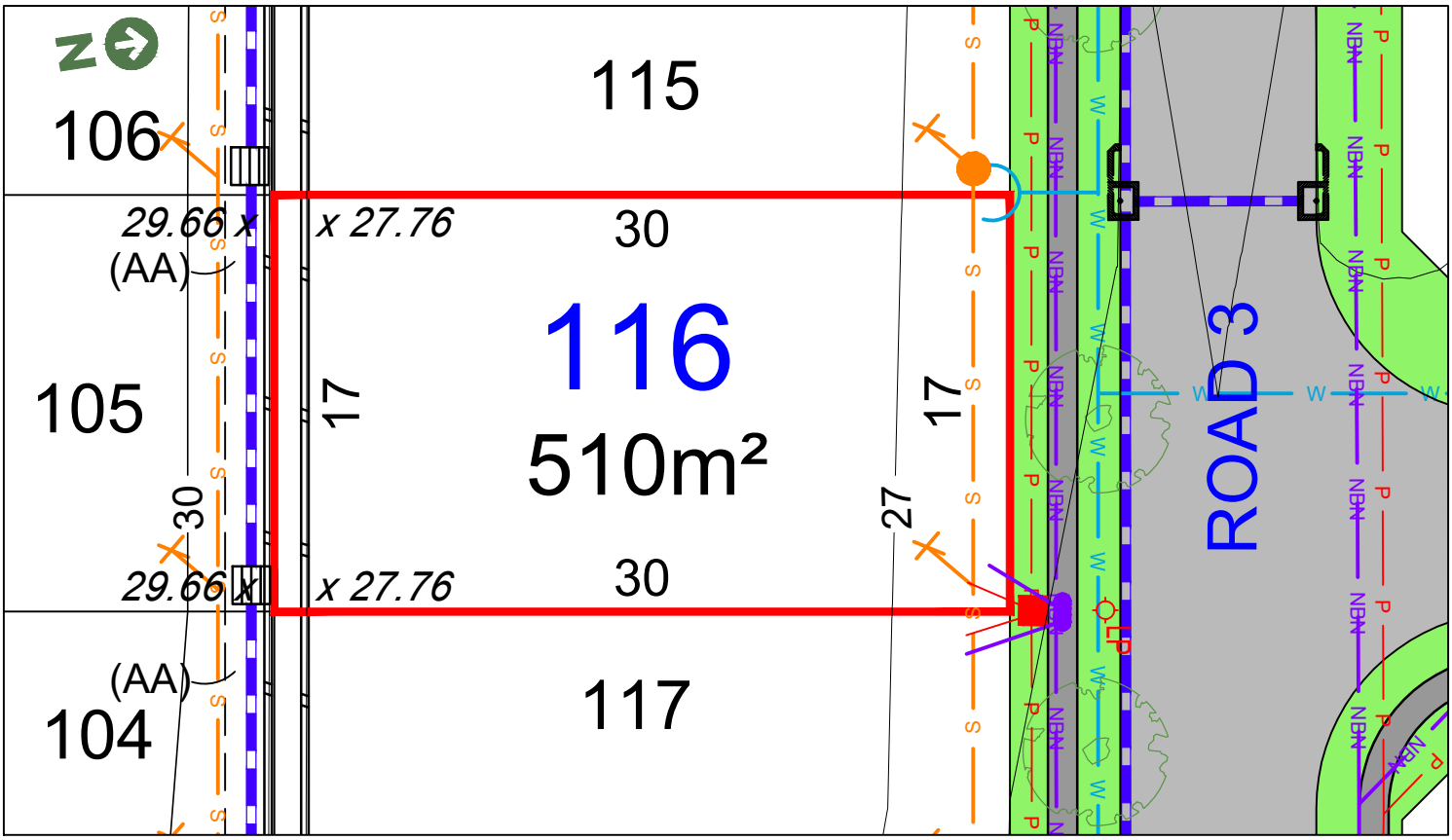

LEGEND:

- TELSTRA /NBN PIT
- HYDRANT
- STOP VALVE
- SEWER MANHOLE
- LIGHT POLE
- KERB INLET PIT
- STORMWATER PIT
- ELECTRICITY PILLAR
- ELECTRICAL SUBSTATION
- STREET TREES
- RETAINING WALLS
- STORMWATER PIPE
- SEWER JUNCTION
- SEWER MAIN
- WATER MAIN
- TELSTRA /NBN
- UNDER GROUND POWER

Anticipated Site Classification - H1 Class
(to be confirmed at completion of construction)

(EA) EASEMENT TO DRAIN WATER 1.5 WIDE

RESTRICTIONS ON USE OF LAND AFFECT THE LOT

DISCLAIMER/ NOTES:

1. Contours are based on finished design levels and are subject to construction and Council certification and therefore should not be considered as final or as-built.
2. Location of utility services including but not limited to power, water, sewer, communications and gas are subject to construction and Supply Authority certification and therefore should not be considered as final or as-built.
3. Survey information such as boundary dimensions and areas, easements etc are subject to Final Survey. Purchasers should refer to the Deposited Plan and 88B Instrument contained in the Contract for Sale of Land for further detailed information.
4. Bushfire and Geotechnical classification are provided for convenience. Purchasers should refer to referenced detail specialist reports.
5. This Preliminary Site Analysis Plan has been collated from various sources of design information and is provided for convenience to assist Purchasers in obtaining quotations/tenders for dwelling construction.
6. This document does not form part of the Contract of Sale of the Land.

REVISION/S:	HD27 STAGE 1 MARKETING r2
DATE:	8th MARCH 2019
BY:	HIGH DEFINITION DESIGN PTY LTD

LOT 117, ROAD 3, EDGEWORTH

BRUSH CREEK
LAKE MACQUARIE

MASTER PLAN

STAGE PLAN

PRELIMINARY SITE ANALYSIS PLAN

SCALE 1:300 @ A4

0 5 10 15 20

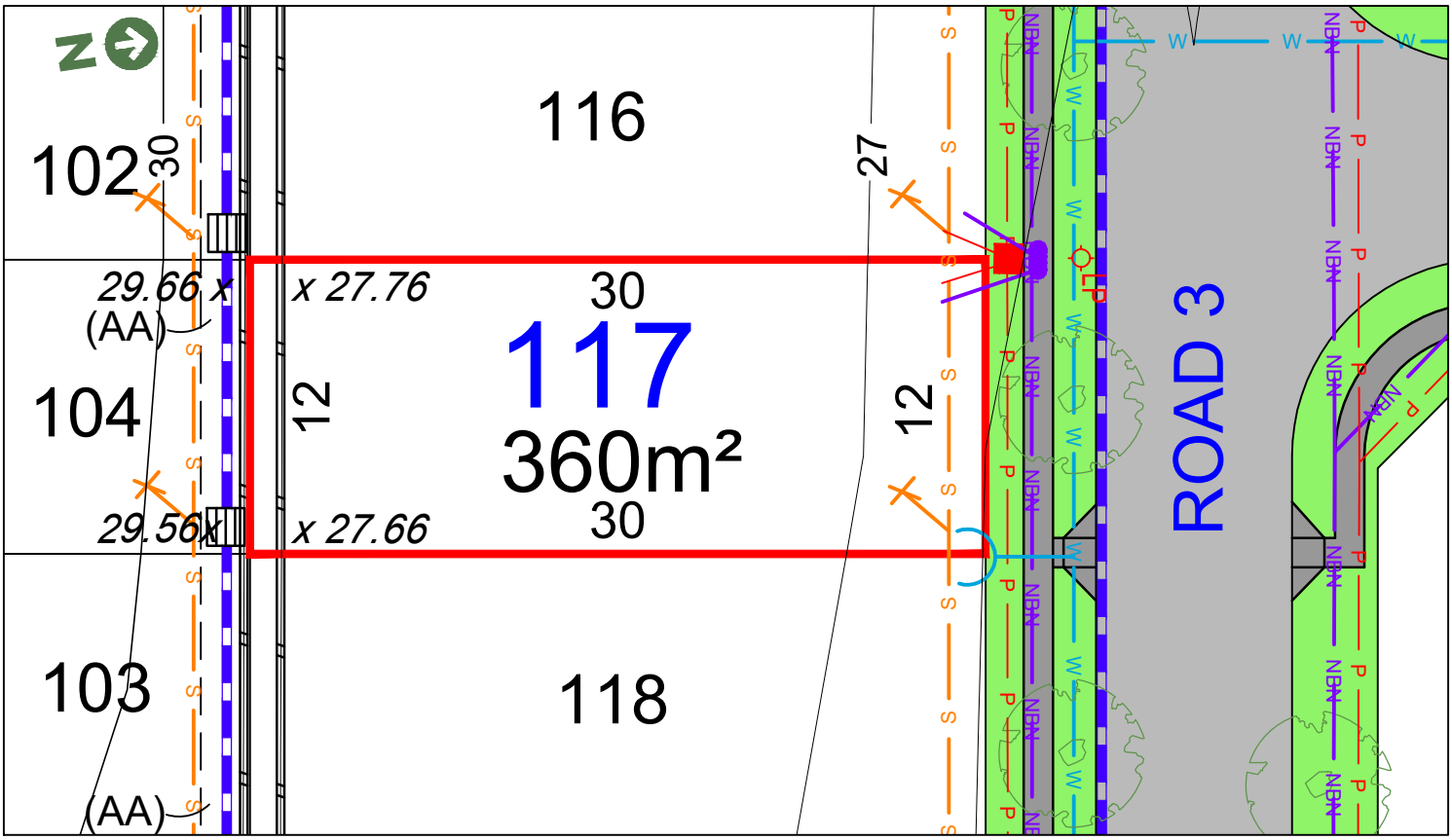

LEGEND:

- TELSTRA /NBN PIT
- HYDRANT
- STOP VALVE
- SEWER MANHOLE
- LIGHT POLE
- KERB INLET PIT
- STORMWATER PIT
- ELECTRICITY PILLAR
- ELECTRICAL SUBSTATION
- STREET TREES
- RETAINING WALLS
- STORMWATER PIPE
- SEWER JUNCTION
- S — SEWER MAIN
- W — WATER MAIN
- NBN — TELSTRA /NBN
- P — UNDER GROUND POWER

Anticipated Site Classification - H1 Class
(to be confirmed at completion of construction)

(EA) EASEMENT TO DRAIN WATER 1.5 WIDE

RESTRICTIONS ON USE OF LAND AFFECT THE LOT

DISCLAIMER/ NOTES:

1. Contours are based on finished design levels and are subject to construction and Council certification and therefore should not be considered as final or as-built.
2. Location of utility services including but not limited to power, water, sewer, communications and gas are subject to construction and Supply Authority certification and therefore should not be considered as final or as-built.
3. Survey information such as boundary dimensions and areas, easements etc are subject to Final Survey. Purchasers should refer to the Deposited Plan and 88B Instrument contained in the Contract for Sale of Land for further detailed information.
4. Bushfire and Geotechnical classification are provided for convenience. Purchasers should refer to referenced detail specialist reports.
5. This Preliminary Site Analysis Plan has been collated from various sources of design information and is provided for convenience to assist Purchasers in obtaining quotations/tenders for dwelling construction.
6. This document does not form part of the Contract of Sale of the Land.

REVISION/S:	HD27 STAGE 1 MARKETING r2
DATE:	8th MARCH 2019
BY:	HIGH DEFINITION DESIGN PTY LTD

LOT 118, ROAD 3, EDGEWORTH

BRUSH CREEK
LAKE MACQUARIE

MASTER PLAN

STAGE PLAN

PRELIMINARY SITE ANALYSIS PLAN

SCALE 1:300 @ A4

0 5 10 15 20

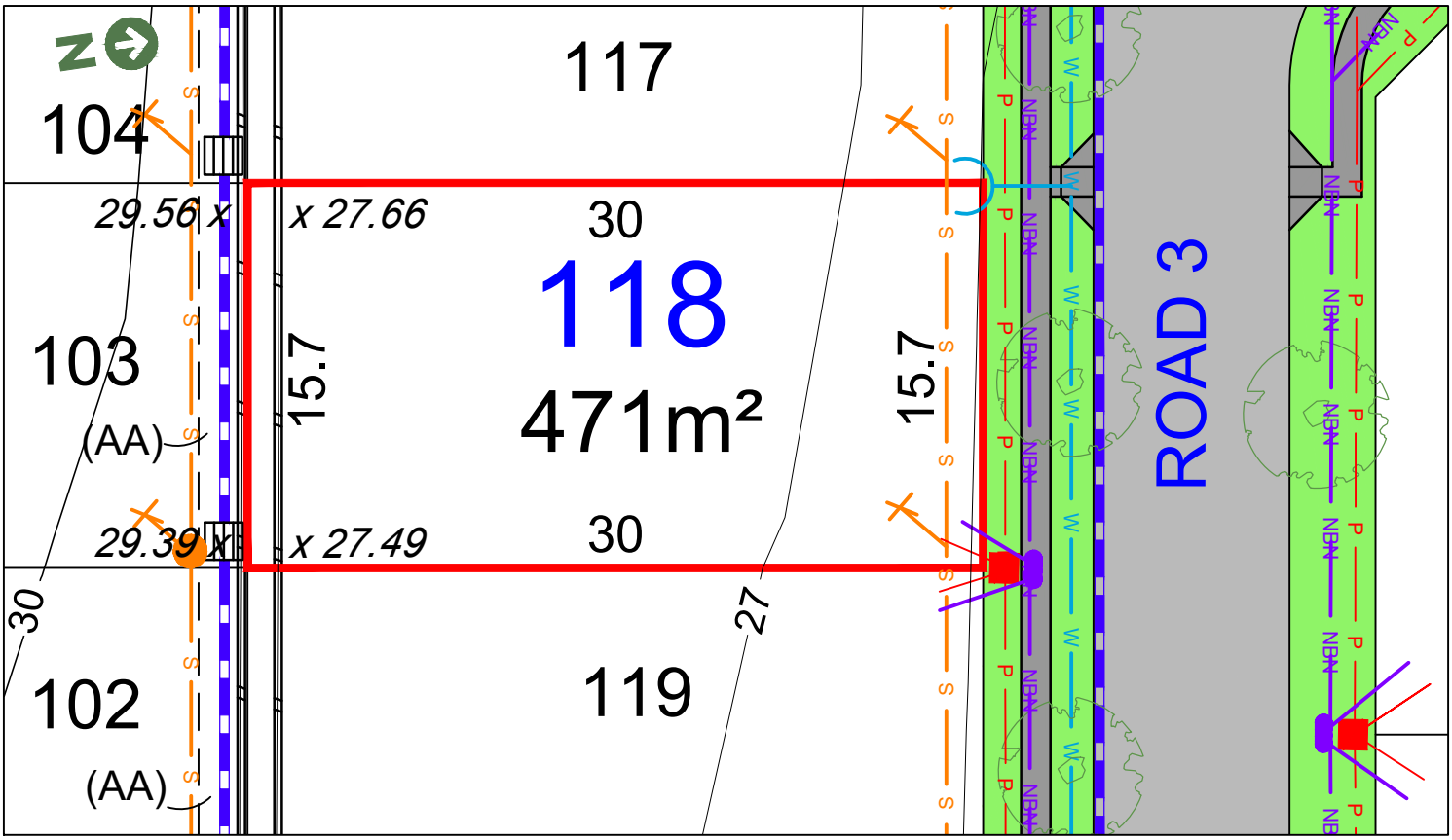

LEGEND:

- TELSTRA /NBN PIT
- HYDRANT
- STOP VALVE
- SEWER MANHOLE
- LP LIGHT POLE
- KERB INLET PIT
- STORMWATER PIT
- ELECTRICITY PILLAR
- ELECTRICAL SUBSTATION
- STREET TREES
- RETAINING WALLS
- STORMWATER PIPE
- SEWER JUNCTION
- S SEWER MAIN
- W WATER MAIN
- NBN TELSTRA /NBN
- P UNDER GROUND POWER

Anticipated Site Classification - H1 Class
(to be confirmed at completion of construction)

(AB) RESTRICTION ON THE USE OF LAND 0.7 WIDE
(AA) EASEMENT TO DRAIN WATER 2.0 WIDE

RESTRICTIONS ON USE OF LAND AFFECT THE LOT

DISCLAIMER/ NOTES:

1. Contours are based on finished design levels and are subject to construction and Council certification and therefore should not be considered as final or as-built.
2. Location of utility services including but not limited to power, water, sewer, communications and gas are subject to construction and Supply Authority certification and therefore should not be considered as final or as-built.
3. Survey information such as boundary dimensions and areas, easements etc are subject to Final Survey. Purchasers should refer to the Deposited Plan and 88B Instrument contained in the Contract for Sale of Land for further detailed information.
4. Bushfire and Geotechnical classification are provided for convenience. Purchasers should refer to referenced detail specialist reports.
5. This Preliminary Site Analysis Plan has been collated from various sources of design information and is provided for convenience to assist Purchasers in obtaining quotations/tenders for dwelling construction.
6. This document does not form part of the Contract of Sale of the Land.

REVISION/S:	HD27 STAGE 1 MARKETING r2
DATE:	8th MARCH 2019
BY:	HIGH DEFINITION DESIGN PTY LTD

LOT 119, ROAD 3, EDGEWORTH

BRUSH CREEK
LAKE MACQUARIE

MASTER PLAN

STAGE PLAN

PRELIMINARY SITE ANALYSIS PLAN

SCALE 1:300 @ A4

0 5 10 15 20

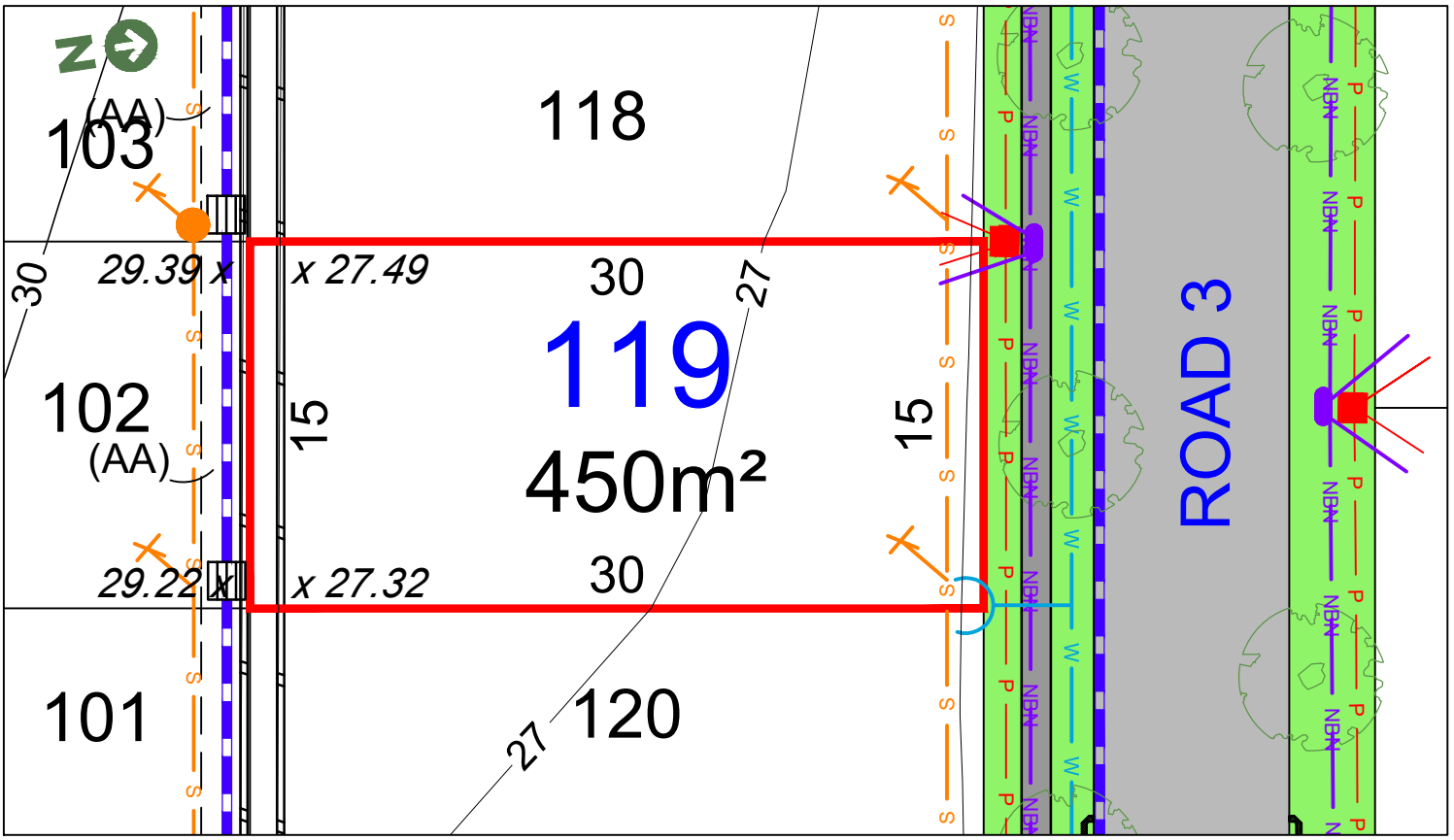

LEGEND:

- TELSTRA /NBN PIT
- HYDRANT
- STOP VALVE
- SEWER MANHOLE
- LIGHT POLE
- KERB INLET PIT
- STORMWATER PIT
- ELECTRICITY PILLAR
- ELECTRICAL SUBSTATION
- STREET TREES
- RETAINING WALLS
- STORMWATER PIPE
- SEWER JUNCTION
- S — SEWER MAIN
- W — WATER MAIN
- NBN — TELSTRA /NBN
- P — UNDER GROUND POWER

Anticipated Site Classification - H1 Class
(to be confirmed at completion of construction)

(AB) RESTRICTION ON THE USE OF LAND 0.7 WIDE
(AA) EASEMENT TO DRAIN WATER 2.0 WIDE

RESTRICTIONS ON USE OF LAND AFFECT THE LOT

DISCLAIMER/ NOTES:

1. Contours are based on finished design levels and are subject to construction and Council certification and therefore should not be considered as final or as-built.
2. Location of utility services including but not limited to power, water, sewer, communications and gas are subject to construction and Supply Authority certification and therefore should not be considered as final or as-built.
3. Survey information such as boundary dimensions and areas, easements etc are subject to Final Survey. Purchasers should refer to the Deposited Plan and 88B Instrument contained in the Contract for Sale of Land for further detailed information.
4. Bushfire and Geotechnical classification are provided for convenience. Purchasers should refer to referenced detail specialist reports.
5. This Preliminary Site Analysis Plan has been collated from various sources of design information and is provided for convenience to assist Purchasers in obtaining quotations/tenders for dwelling construction.
6. This document does not form part of the Contract of Sale of the Land.

REVISION/S:	HD27 STAGE 1 MARKETING r2
DATE:	8th MARCH 2019
BY:	HIGH DEFINITION DESIGN PTY LTD

LOT 120, ROAD 3, EDGEWORTH

BRUSH CREEK
LAKE MACQUARIE

MASTER PLAN

STAGE PLAN

PRELIMINARY SITE ANALYSIS PLAN

SCALE 1:300 @ A4

0 5 10 15 20

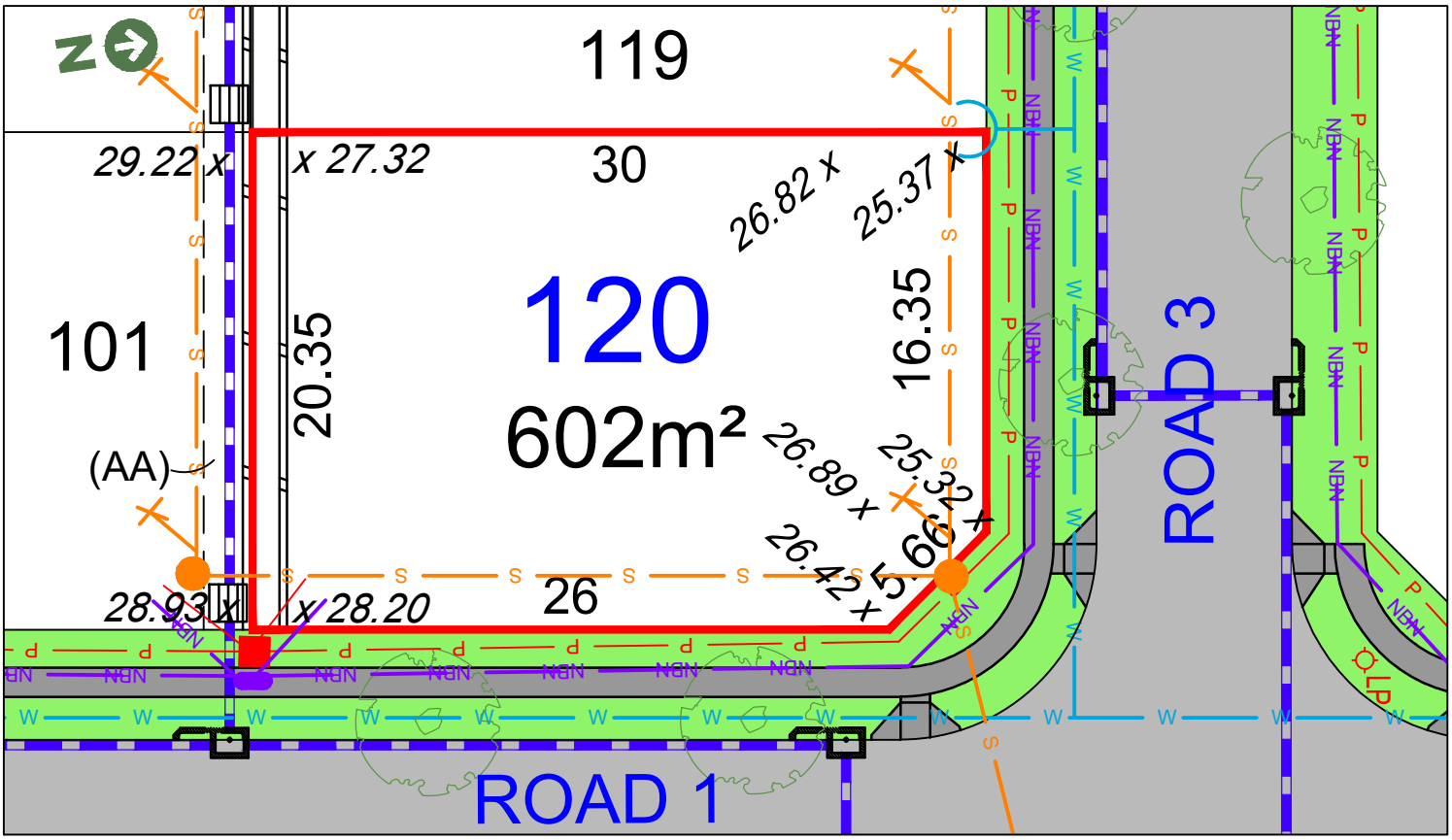

LEGEND:

- TELSTRA /NBN PIT
- HYDRANT
- STOP VALVE
- SEWER MANHOLE
- LIGHT POLE
- KERB INLET PIT
- STORMWATER PIT
- ELECTRICITY PILLAR
- ELECTRICAL SUBSTATION
- STREET TREES
- RETAINING WALLS
- STORMWATER PIPE
- SEWER JUNCTION
- S — SEWER MAIN
- W — WATER MAIN
- NBN — TELSTRA /NBN
- P — UNDER GROUND POWER

Anticipated Site Classification - H1 Class
(to be confirmed at completion of construction)

(AB) RESTRICTION ON THE USE OF LAND 0.7 WIDE
(AA) EASEMENT TO DRAIN WATER 2.0 WIDE

RESTRICTIONS ON USE OF LAND AFFECT THE LOT

DISCLAIMER/ NOTES:

1. Contours are based on finished design levels and are subject to construction and Council certification and therefore should not be considered as final or as-built.
2. Location of utility services including but not limited to power, water, sewer, communications and gas are subject to construction and Supply Authority certification and therefore should not be considered as final or as-built.
3. Survey information such as boundary dimensions and areas, easements etc are subject to Final Survey. Purchasers should refer to the Deposited Plan and 88B Instrument contained in the Contract for Sale of Land for further detailed information.
4. Bushfire and Geotechnical classification are provided for convenience. Purchasers should refer to referenced detail specialist reports.
5. This Preliminary Site Analysis Plan has been collated from various sources of design information and is provided for convenience to assist Purchasers in obtaining quotations/tenders for dwelling construction.
6. This document does not form part of the Contract of Sale of the Land.

REVISION/S:	HD27 STAGE 1 MARKETING r2
DATE:	14th May 2019
BY:	HIGH DEFINITION DESIGN PTY LTD

LOT 121, ROAD 3, EDGEWORTH

BRUSH CREEK
LAKE MACQUARIE

MASTER PLAN

STAGE PLAN

PRELIMINARY SITE ANALYSIS PLAN

SCALE 1:300 @ A4

0 5 10 15 20

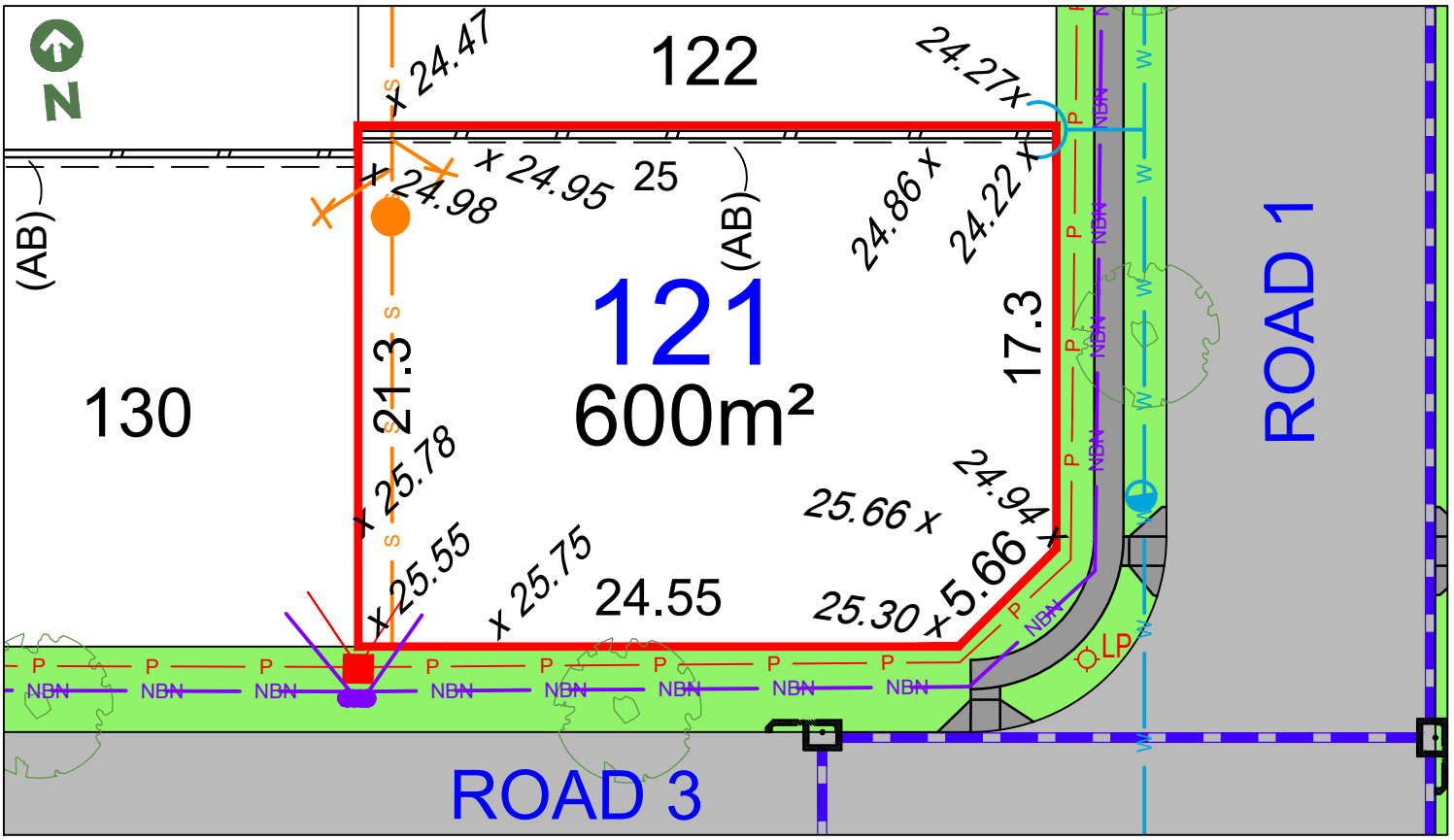

LEGEND:

- TELSTRA /NBN PIT
- HYDRANT
- STOP VALVE
- SEWER MANHOLE
- LIGHT POLE
- KERB INLET PIT
- STORMWATER PIT
- ELECTRICITY PILLAR
- ELECTRICAL SUBSTATION
- STREET TREES
- RETAINING WALLS
- STORMWATER PIPE
- SEWER JUNCTION
- SEWER MAIN
- WATER MAIN
- TELSTRA /NBN
- UNDER GROUND POWER

Anticipated Site Classification - H1 Class
(to be confirmed at completion of construction)

(AB) RESTRICTION ON THE USE OF LAND 0.7 WIDE
(AA) EASEMENT TO DRAIN WATER 2.0 WIDE

RESTRICTIONS ON USE OF LAND AFFECT THE LOT

DISCLAIMER/ NOTES:

1. Contours are based on finished design levels and are subject to construction and Council certification and therefore should not be considered as final or as-built.
2. Location of utility services including but not limited to power, water, sewer, communications and gas are subject to construction and Supply Authority certification and therefore should not be considered as final or as-built.
3. Survey information such as boundary dimensions and areas, easements etc are subject to Final Survey. Purchasers should refer to the Deposited Plan and 88B Instrument contained in the Contract for Sale of Land for further detailed information.
4. Bushfire and Geotechnical classification are provided for convenience. Purchasers should refer to referenced detail specialist reports.
5. This Preliminary Site Analysis Plan has been collated from various sources of design information and is provided for convenience to assist Purchasers in obtaining quotations/tenders for dwelling construction.
6. This document does not form part of the Contract of Sale of the Land.

REVISION/S:	HD27 STAGE 1 MARKETING r2
DATE:	8th MARCH 2019
BY:	HIGH DEFINITION DESIGN PTY LTD

LOT 122, ROAD 1, EDGEWORTH

BRUSH CREEK
LAKE MACQUARIE

MASTER PLAN

STAGE PLAN

PRELIMINARY SITE ANALYSIS PLAN

SCALE 1:300 @ A4

0 5 10 15 20

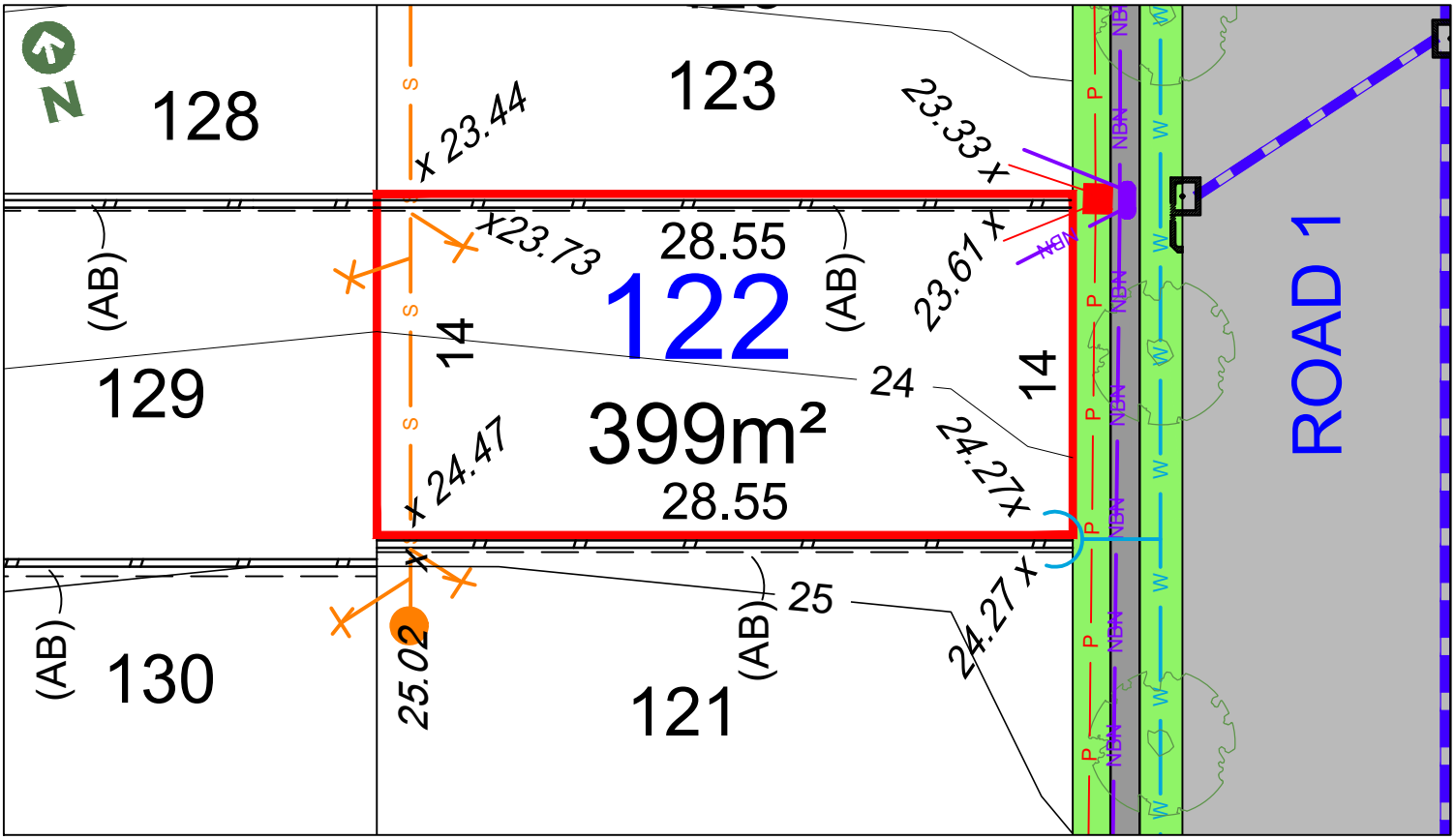

LEGEND:

- TELSTRA /NBN PIT
- HYDRANT
- STOP VALVE
- SEWER MANHOLE
- LIGHT POLE
- KERB INLET PIT
- STORMWATER PIT
- ELECTRICITY PILLAR
- ELECTRICAL SUBSTATION
- STREET TREES
- RETAINING WALLS
- STORMWATER PIPE
- SEWER JUNCTION
- S — SEWER MAIN
- W — WATER MAIN
- NBN — TELSTRA /NBN
- P — UNDER GROUND POWER

Anticipated Site Classification - H1 Class
(to be confirmed at completion of construction)

(AB) RESTRICTION ON THE USE OF LAND 0.7 WIDE
(AA) EASEMENT TO DRAIN WATER 2.0 WIDE

RESTRICTIONS ON USE OF LAND AFFECT THE LOT

DISCLAIMER/ NOTES:

1. Contours are based on finished design levels and are subject to construction and Council certification and therefore should not be considered as final or as-built.
2. Location of utility services including but not limited to power, water, sewer, communications and gas are subject to construction and Supply Authority certification and therefore should not be considered as final or as-built.
3. Survey information such as boundary dimensions and areas, easements etc are subject to Final Survey. Purchasers should refer to the Deposited Plan and 88B Instrument contained in the Contract for Sale of Land for further detailed information.
4. Bushfire and Geotechnical classification are provided for convenience. Purchasers should refer to referenced detail specialist reports.
5. This Preliminary Site Analysis Plan has been collated from various sources of design information and is provided for convenience to assist Purchasers in obtaining quotations/tenders for dwelling construction.
6. This document does not form part of the Contract of Sale of the Land.

REVISION/S:	HD27 STAGE 1 MARKETING r2
DATE:	8th MARCH 2019
BY:	HIGH DEFINITION DESIGN PTY LTD

LOT 123, ROAD 1, EDGEWORTH

BRUSH CREEK
— LAKE MACQUARIE —

MASTER PLAN

STAGE PLAN

PRELIMINARY SITE ANALYSIS PLAN

SCALE 1:300 @ A4

0 5 10 15 20

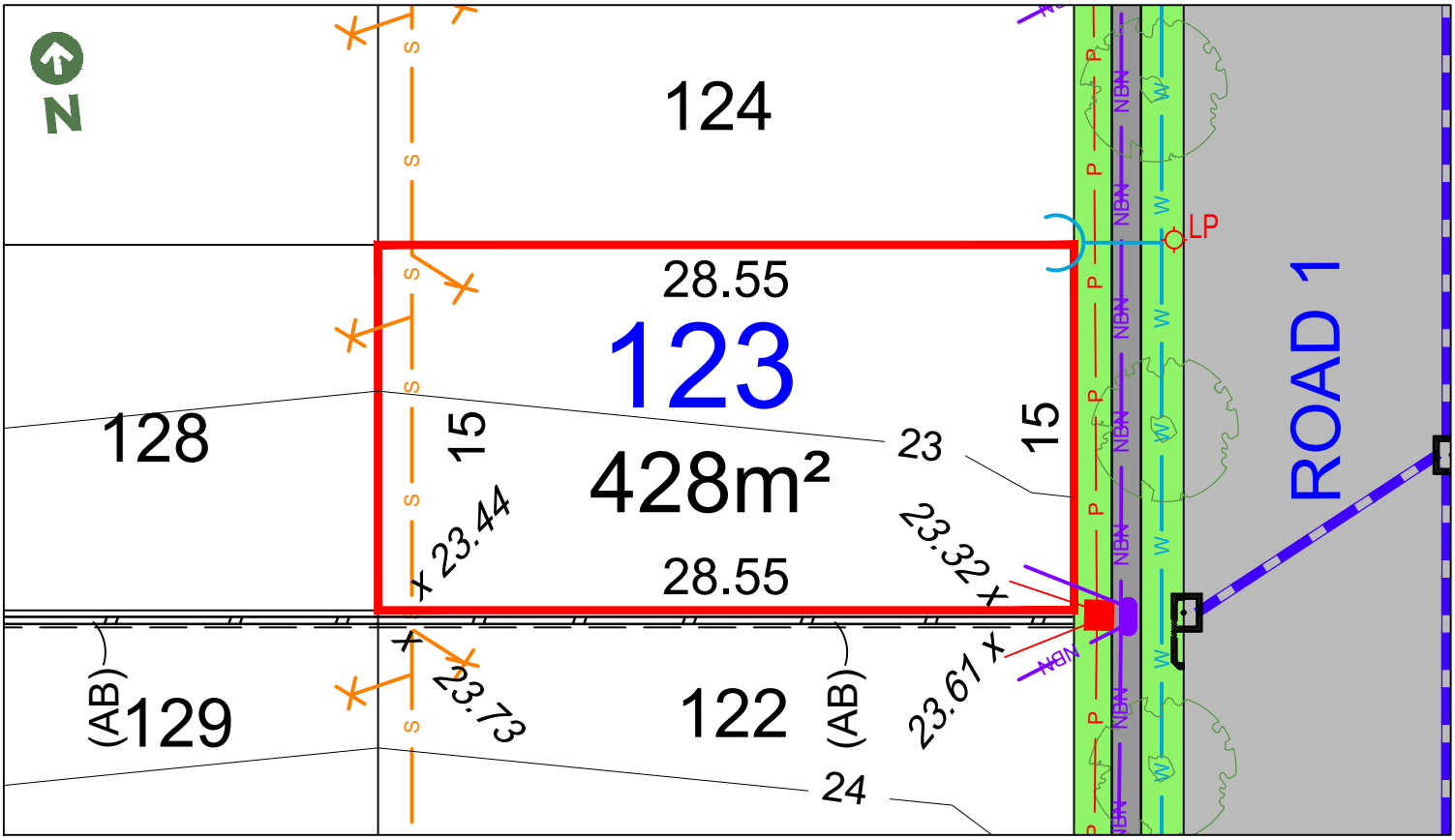

LEGEND:

- TELSTRA /NBN PIT
- HYDRANT
- STOP VALVE
- SEWER MANHOLE
- LP LIGHT POLE
- KERB INLET PIT
- STORMWATER PIT
- ELECTRICITY PILLAR
- ELECTRICAL SUBSTATION
- STREET TREES
- RETAINING WALLS
- STORMWATER PIPE
- SEWER JUNCTION
- S SEWER MAIN
- W WATER MAIN
- NBN TELSTRA /NBN
- P UNDER GROUND POWER

Anticipated Site Classification - H1 Class
(to be confirmed at completion of construction)

(AB) RESTRICTION ON THE USE OF LAND 0.7 WIDE
(AA) EASEMENT TO DRAIN WATER 2.0 WIDE

RESTRICTIONS ON USE OF LAND AFFECT THE LOT

DISCLAIMER/ NOTES:

1. Contours are based on finished design levels and are subject to construction and Council certification and therefore should not be considered as final or as-built.
2. Location of utility services including but not limited to power, water, sewer, communications and gas are subject to construction and Supply Authority certification and therefore should not be considered as final or as-built.
3. Survey information such as boundary dimensions and areas, easements etc are subject to Final Survey. Purchasers should refer to the Deposited Plan and 88B Instrument contained in the Contract for Sale of Land for further detailed information.
4. Bushfire and Geotechnical classification are provided for convenience. Purchasers should refer to referenced detail specialist reports.
5. This Preliminary Site Analysis Plan has been collated from various sources of design information and is provided for convenience to assist Purchasers in obtaining quotations/tenders for dwelling construction.
6. This document does not form part of the Contract of Sale of the Land.

REVISION/S:	HD27 STAGE 1 MARKETING r2
DATE:	8th MARCH 2019
BY:	HIGH DEFINITION DESIGN PTY LTD

LOT 124, ROAD 1, EDGEWORTH

BRUSH CREEK
LAKE MACQUARIE

MASTER PLAN

STAGE PLAN

PRELIMINARY SITE ANALYSIS PLAN

SCALE 1:300 @ A4

0 5 10 15 20

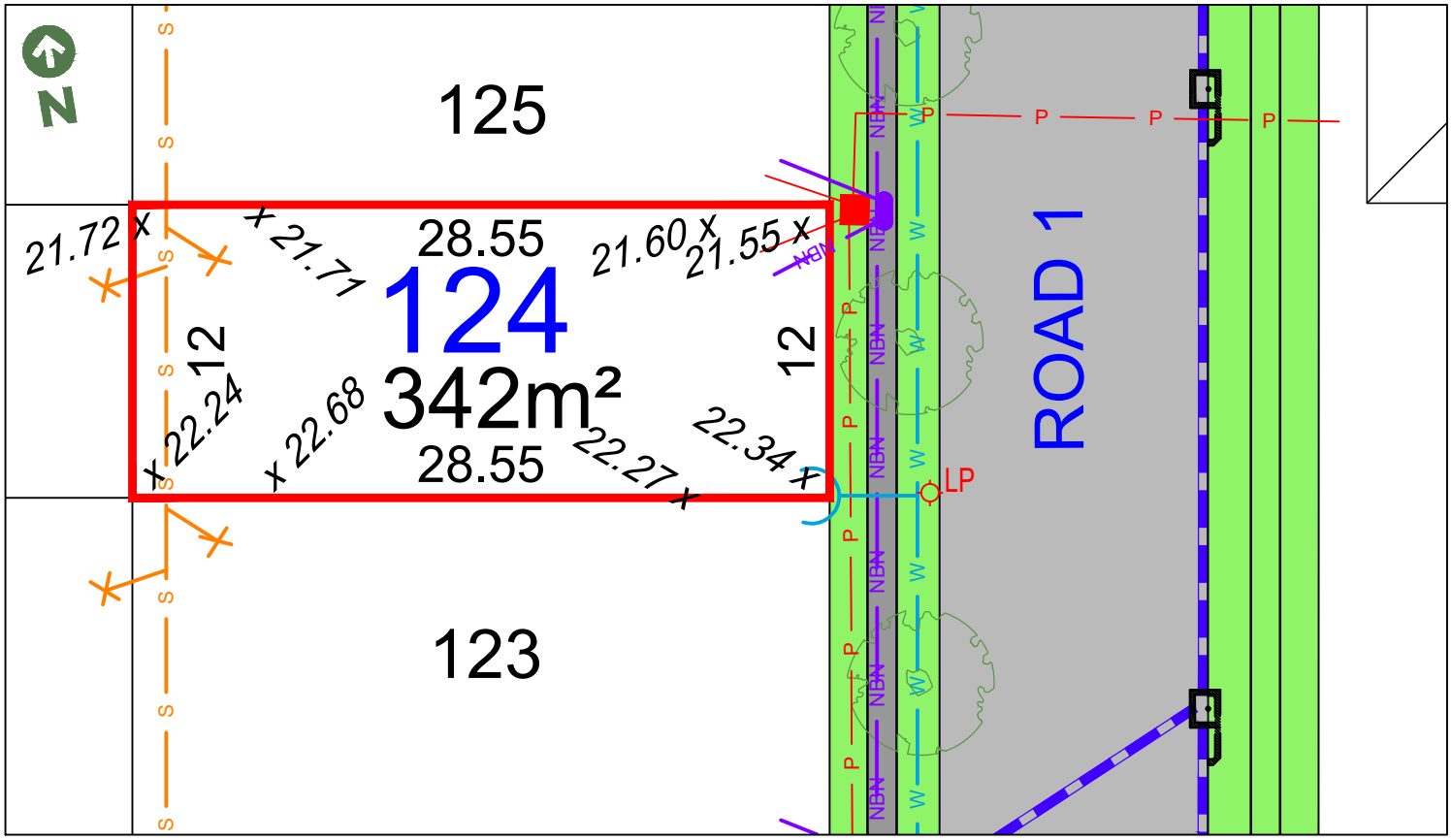

LEGEND:

- TELSTRA /NBN PIT
- HYDRANT
- STOP VALVE
- SEWER MANHOLE
- LP LIGHT POLE
- KERB INLET PIT
- STORMWATER PIT
- ELECTRICITY PILLAR
- ELECTRICAL SUBSTATION
- STREET TREES
- RETAINING WALLS
- STORMWATER PIPE
- SEWER JUNCTION
- S SEWER MAIN
- W WATER MAIN
- NBN TELSTRA /NBN
- P UNDER GROUND POWER

Anticipated Site Classification - H1 Class
(to be confirmed at completion of construction)

(AB) RESTRICTION ON THE USE OF LAND 0.7 WIDE
(AA) EASEMENT TO DRAIN WATER 2.0 WIDE

RESTRICTIONS ON USE OF LAND AFFECT THE LOT

DISCLAIMER/ NOTES:

1. Contours are based on finished design levels and are subject to construction and Council certification and therefore should not be considered as final or as-built.
2. Location of utility services including but not limited to power, water, sewer, communications and gas are subject to construction and Supply Authority certification and therefore should not be considered as final or as-built.
3. Survey information such as boundary dimensions and areas, easements etc are subject to Final Survey. Purchasers should refer to the Deposited Plan and 88B Instrument contained in the Contract for Sale of Land for further detailed information.
4. Bushfire and Geotechnical classification are provided for convenience. Purchasers should refer to referenced detail specialist reports.
5. This Preliminary Site Analysis Plan has been collated from various sources of design information and is provided for convenience to assist Purchasers in obtaining quotations/tenders for dwelling construction.
6. This document does not form part of the Contract of Sale of the Land.

REVISION/S:	HD27 STAGE 1 MARKETING r2
DATE:	14th May 2019
BY:	HIGH DEFINITION DESIGN PTY LTD

LOT 125, ROAD 1, EDGEWORTH

BRUSH CREEK
LAKE MACQUARIE

MASTER PLAN

STAGE PLAN

PRELIMINARY SITE ANALYSIS PLAN

SCALE 1:300 @ A4

0 5 10 15 20

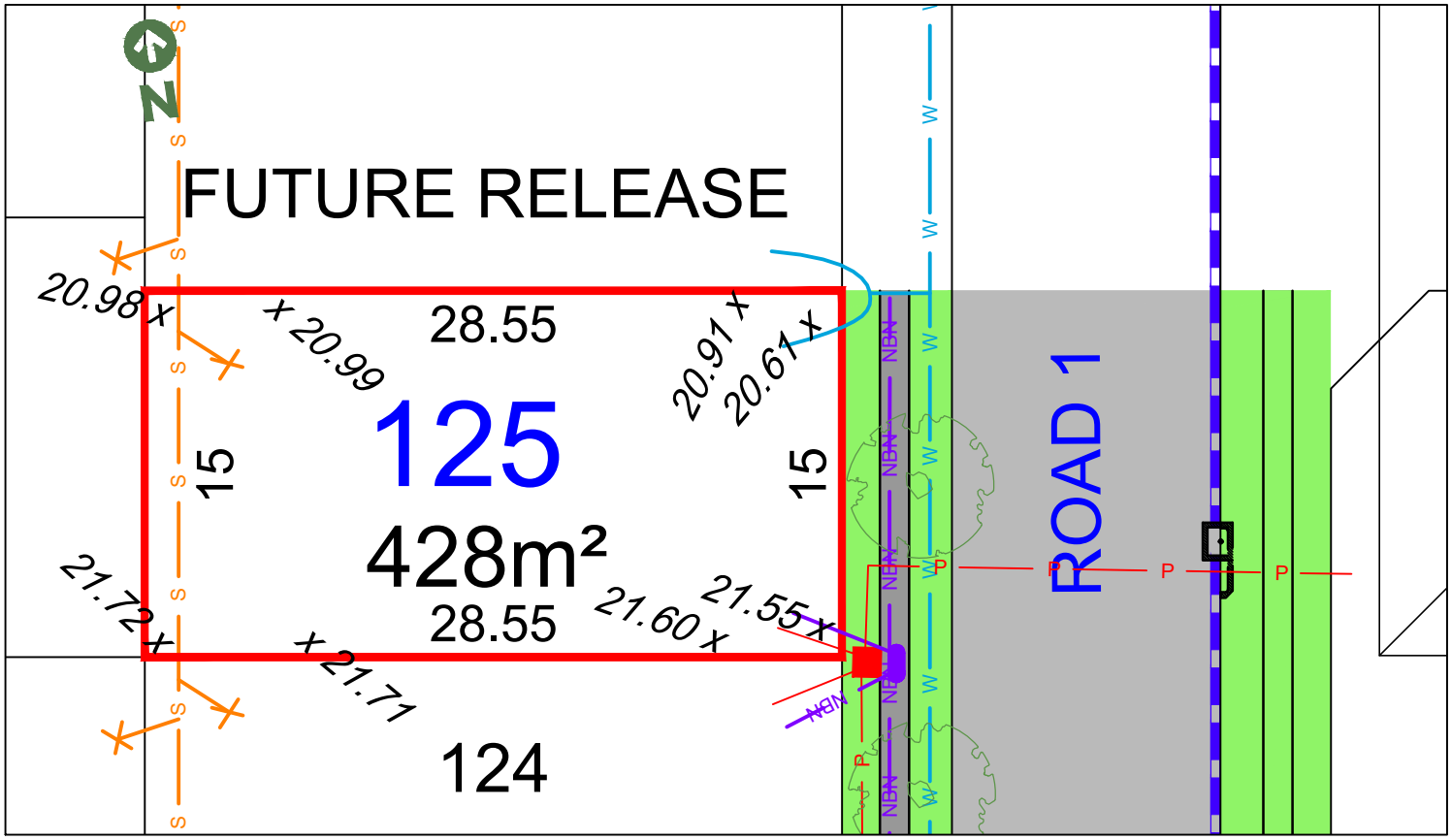

LEGEND:

- TELSTRA /NBN PIT
- HYDRANT
- STOP VALVE
- SEWER MANHOLE
- LP LIGHT POLE
- KERB INLET PIT
- STORMWATER PIT
- ELECTRICITY PILLAR
- ELECTRICAL SUBSTATION
- STREET TREES
- RETAINING WALLS
- STORMWATER PIPE
- SEWER JUNCTION
- S SEWER MAIN
- W WATER MAIN
- NBN TELSTRA /NBN
- P UNDER GROUND POWER

Anticipated Site Classification - H1 Class
(to be confirmed at completion of construction)

(AB) RESTRICTION ON THE USE OF LAND 0.7 WIDE
(AA) EASEMENT TO DRAIN WATER 2.0 WIDE

RESTRICTIONS ON USE OF LAND AFFECT THE LOT

DISCLAIMER/ NOTES:

1. Contours are based on finished design levels and are subject to construction and Council certification and therefore should not be considered as final or as-built.
2. Location of utility services including but not limited to power, water, sewer, communications and gas are subject to construction and Supply Authority certification and therefore should not be considered as final or as-built.
3. Survey information such as boundary dimensions and areas, easements etc are subject to Final Survey. Purchasers should refer to the Deposited Plan and 88B Instrument contained in the Contract for Sale of Land for further detailed information.
4. Bushfire and Geotechnical classification are provided for convenience. Purchasers should refer to referenced detail specialist reports.
5. This Preliminary Site Analysis Plan has been collated from various sources of design information and is provided for convenience to assist Purchasers in obtaining quotations/tenders for dwelling construction.
6. This document does not form part of the Contract of Sale of the Land.

REVISION/S:	HD27 STAGE 1 MARKETING r2
DATE:	11th June 2019
BY:	HIGH DEFINITION DESIGN PTY LTD

LOT 126, ROAD 4, EDGEWORTH

BRUSH CREEK
LAKE MACQUARIE

MASTER PLAN

STAGE PLAN

PRELIMINARY SITE ANALYSIS PLAN

SCALE 1:300 @ A4

0 5 10 15 20

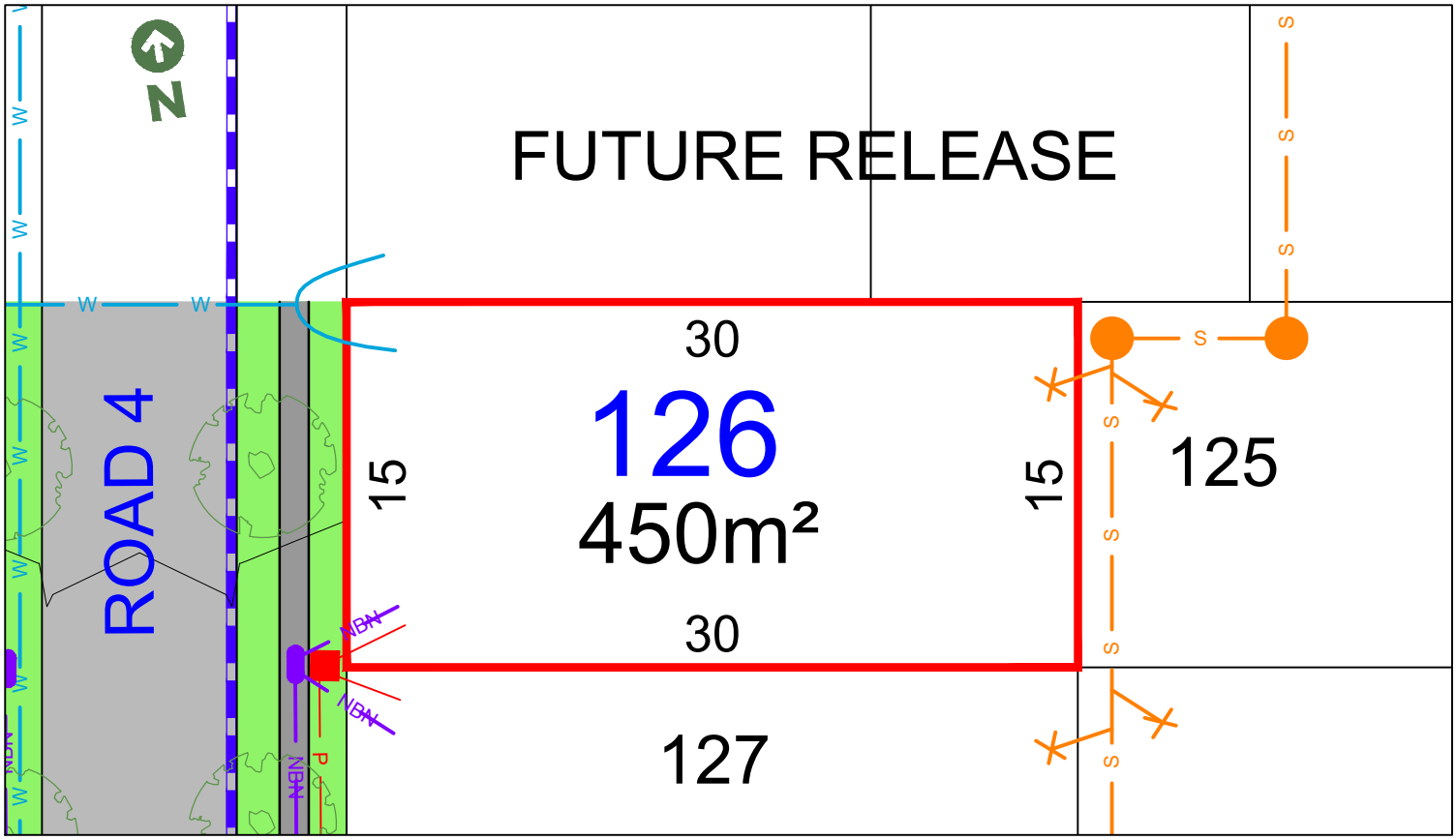

LEGEND:

- TELSTRA /NBN PIT
- HYDRANT
- STOP VALVE
- SEWER MANHOLE
- LP LIGHT POLE
- KERB INLET PIT
- STORMWATER PIT
- ELECTRICITY PILLAR
- ELECTRICAL SUBSTATION
- STREET TREES
- RETAINING WALLS
- STORMWATER PIPE
- SEWER JUNCTION
- S SEWER MAIN
- W WATER MAIN
- NBN TELSTRA /NBN
- P UNDER GROUND POWER

Anticipated Site Classification - H1 Class
(to be confirmed at completion of construction)

(AB) RESTRICTION ON THE USE OF LAND 0.7 WIDE
(AA) EASEMENT TO DRAIN WATER 2.0 WIDE

RESTRICTIONS ON USE OF LAND AFFECT THE LOT

DISCLAIMER/ NOTES:

1. Contours are based on finished design levels and are subject to construction and Council certification and therefore should not be considered as final or as-built.
2. Location of utility services including but not limited to power, water, sewer, communications and gas are subject to construction and Supply Authority certification and therefore should not be considered as final or as-built.
3. Survey information such as boundary dimensions and areas, easements etc are subject to Final Survey. Purchasers should refer to the Deposited Plan and 88B Instrument contained in the Contract for Sale of Land for further detailed information.
4. Bushfire and Geotechnical classification are provided for convenience. Purchasers should refer to referenced detail specialist reports.
5. This Preliminary Site Analysis Plan has been collated from various sources of design information and is provided for convenience to assist Purchasers in obtaining quotations/tenders for dwelling construction.
6. This document does not form part of the Contract of Sale of the Land.

REVISION/S:	HD27 STAGE 1 MARKETING r2
DATE:	8th MARCH 2019
BY:	HIGH DEFINITION DESIGN PTY LTD

LOT 127, ROAD 4, EDGEWORTH

BRUSH CREEK
LAKE MACQUARIE

MASTER PLAN

STAGE PLAN

PRELIMINARY SITE ANALYSIS PLAN

SCALE 1:300 @ A4

0 5 10 15 20

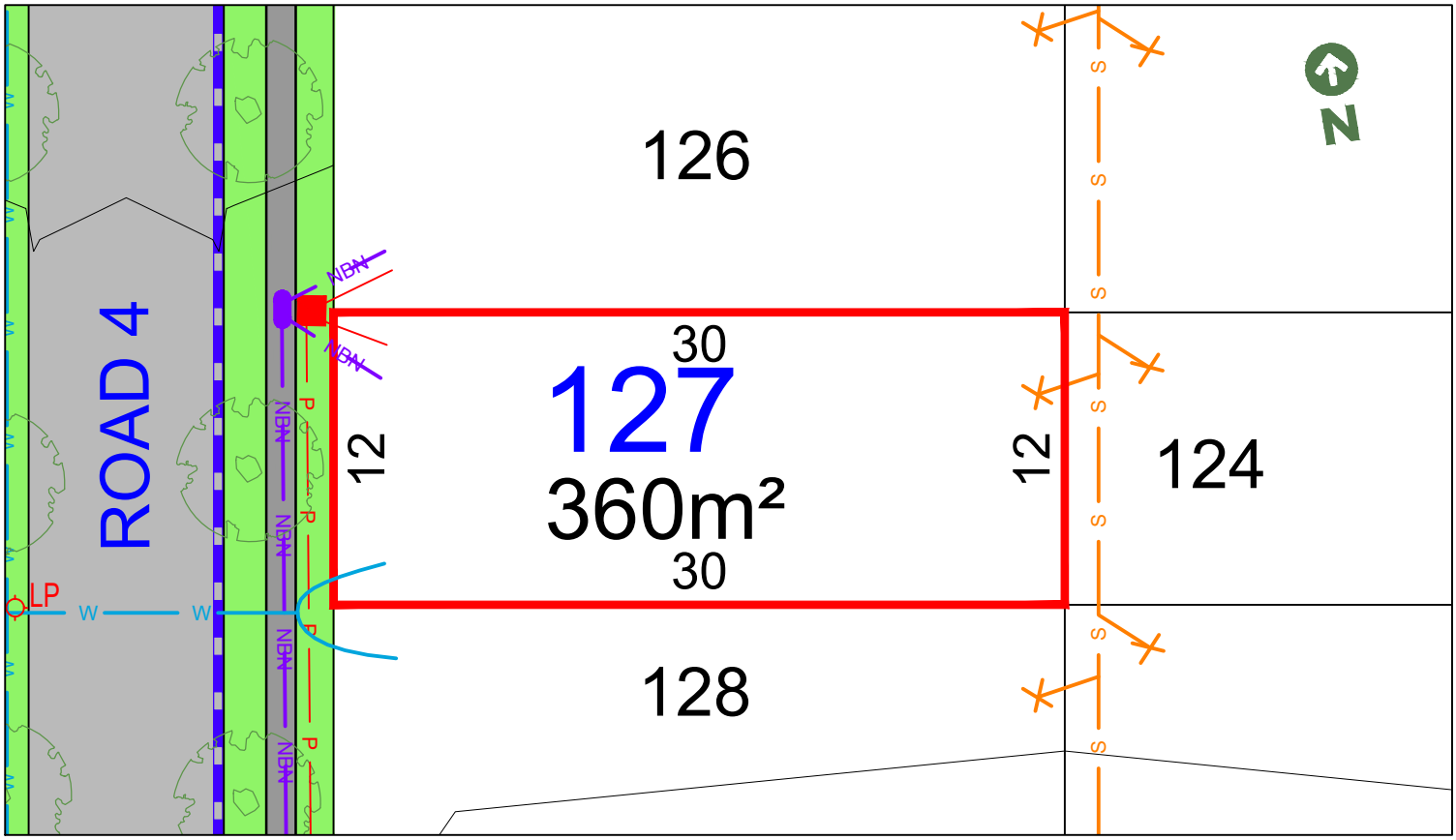

LEGEND:

- TELSTRA /NBN PIT
- HYDRANT
- STOP VALVE
- SEWER MANHOLE
- LP LIGHT POLE
- KERB INLET PIT
- STORMWATER PIT
- ELECTRICITY PILLAR
- ELECTRICAL SUBSTATION
- STREET TREES
- RETAINING WALLS
- STORMWATER PIPE
- SEWER JUNCTION
- S SEWER MAIN
- W WATER MAIN
- NBN TELSTRA /NBN
- P UNDER GROUND POWER

Anticipated Site Classification - H1 Class
(to be confirmed at completion of construction)

(AB) RESTRICTION ON THE USE OF LAND 0.7 WIDE
(AA) EASEMENT TO DRAIN WATER 2.0 WIDE

RESTRICTIONS ON USE OF LAND AFFECT THE LOT

DISCLAIMER/ NOTES:

1. Contours are based on finished design levels and are subject to construction and Council certification and therefore should not be considered as final or as-built.
2. Location of utility services including but not limited to power, water, sewer, communications and gas are subject to construction and Supply Authority certification and therefore should not be considered as final or as-built.
3. Survey information such as boundary dimensions and areas, easements etc are subject to Final Survey. Purchasers should refer to the Deposited Plan and 88B Instrument contained in the Contract for Sale of Land for further detailed information.
4. Bushfire and Geotechnical classification are provided for convenience. Purchasers should refer to referenced detail specialist reports.
5. This Preliminary Site Analysis Plan has been collated from various sources of design information and is provided for convenience to assist Purchasers in obtaining quotations/tenders for dwelling construction.
6. This document does not form part of the Contract of Sale of the Land.

REVISION/S:	HD27 STAGE 1 MARKETING r2
DATE:	8th MARCH 2019
BY:	HIGH DEFINITION DESIGN PTY LTD

LOT 128, ROAD 4, EDGEWORTH

BRUSH CREEK
LAKE MACQUARIE

MASTER PLAN

STAGE PLAN

PRELIMINARY SITE ANALYSIS PLAN

SCALE 1:300 @ A4

0 5 10 15 20

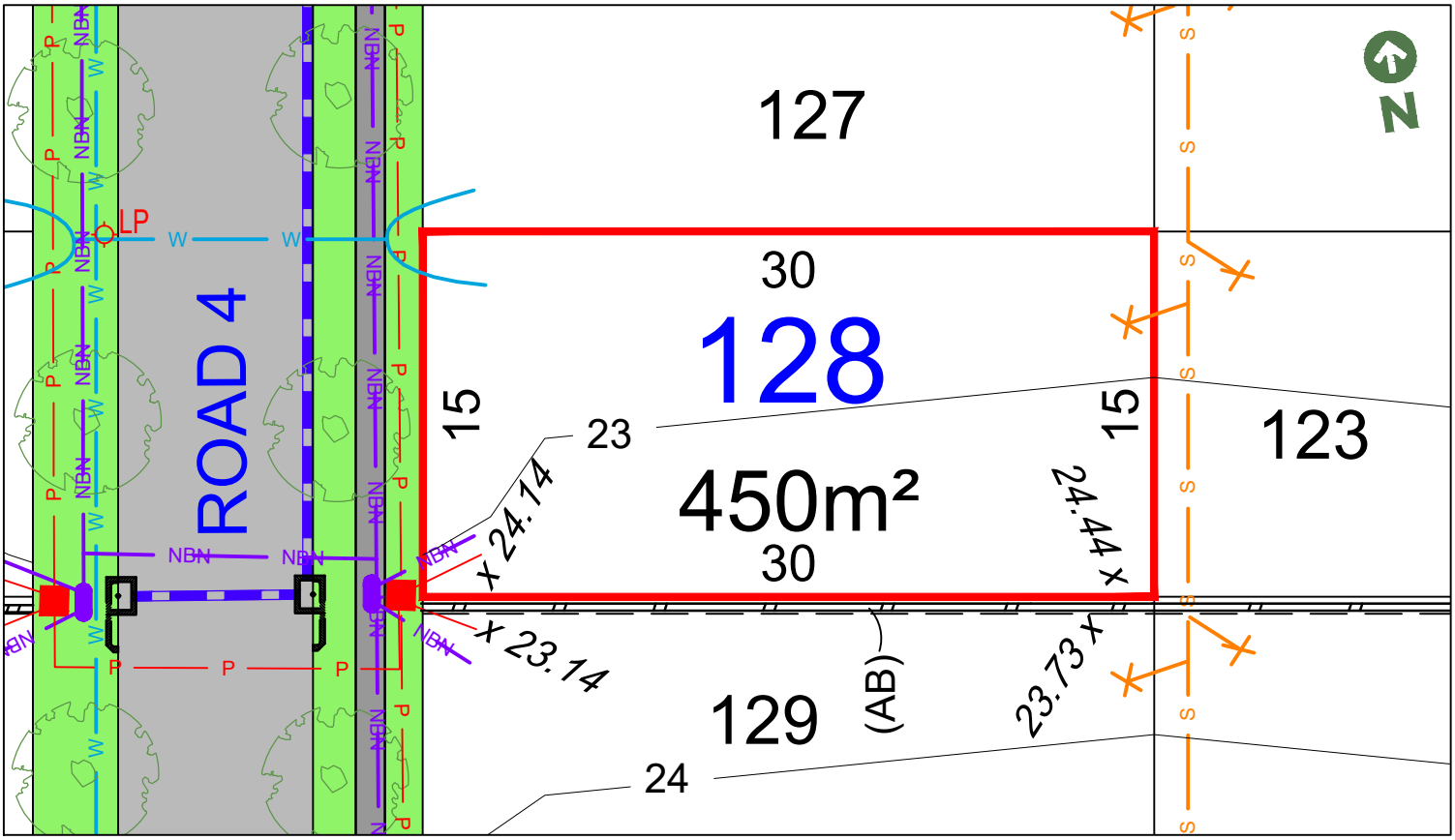

LEGEND:

- TELSTRA /NBN PIT
- HYDRANT
- STOP VALVE
- SEWER MANHOLE
- LIGHT POLE
- KERB INLET PIT
- STORMWATER PIT
- ELECTRICITY PILLAR
- ELECTRICAL SUBSTATION
- STREET TREES
- RETAINING WALLS
- STORMWATER PIPE
- SEWER JUNCTION
- S — SEWER MAIN
- W — WATER MAIN
- NBN — TELSTRA /NBN
- P — UNDER GROUND POWER

Anticipated Site Classification - H1 Class
(to be confirmed at completion of construction)

(AB) RESTRICTION ON THE USE OF LAND 0.7 WIDE
(AA) EASEMENT TO DRAIN WATER 2.0 WIDE

RESTRICTIONS ON USE OF LAND AFFECT THE LOT

DISCLAIMER/ NOTES:

1. Contours are based on finished design levels and are subject to construction and Council certification and therefore should not be considered as final or as-built.
2. Location of utility services including but not limited to power, water, sewer, communications and gas are subject to construction and Supply Authority certification and therefore should not be considered as final or as-built.
3. Survey information such as boundary dimensions and areas, easements etc are subject to Final Survey. Purchasers should refer to the Deposited Plan and 88B Instrument contained in the Contract for Sale of Land for further detailed information.
4. Bushfire and Geotechnical classification are provided for convenience. Purchasers should refer to referenced detail specialist reports.
5. This Preliminary Site Analysis Plan has been collated from various sources of design information and is provided for convenience to assist Purchasers in obtaining quotations/tenders for dwelling construction.
6. This document does not form part of the Contract of Sale of the Land.

REVISION/S:	HD27 STAGE 1 MARKETING r2
DATE:	8th MARCH 2019
BY:	HIGH DEFINITION DESIGN PTY LTD

LOT 129, ROAD 4, EDGEWORTH

BRUSH CREEK
LAKE MACQUARIE

MASTER PLAN

STAGE PLAN

PRELIMINARY SITE ANALYSIS PLAN

SCALE 1:300 @ A4

0 5 10 15 20

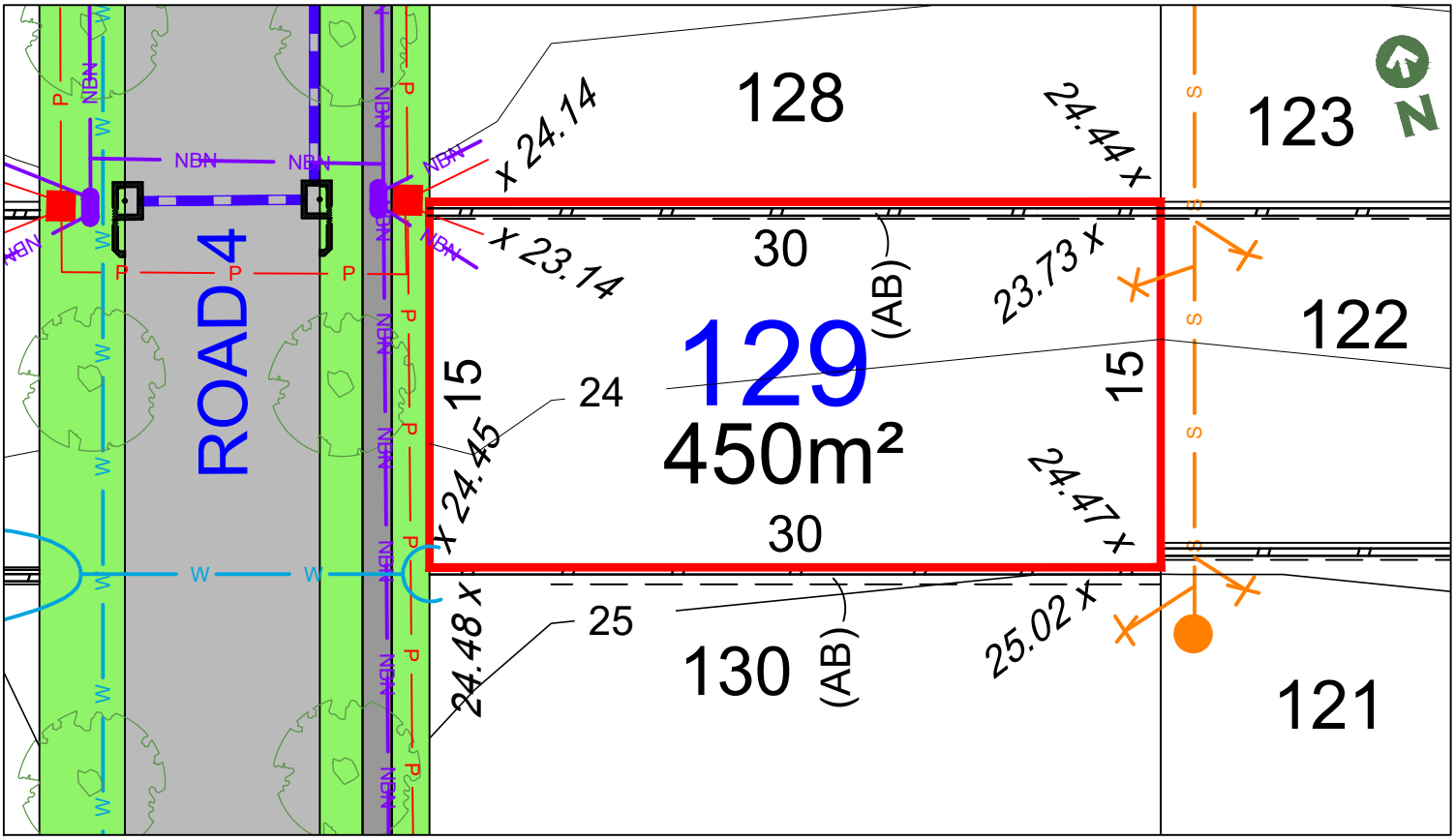

LEGEND:

- TELSTRA /NBN PIT
- HYDRANT
- STOP VALVE
- SEWER MANHOLE
- LP LIGHT POLE
- KERB INLET PIT
- STORMWATER PIT
- ELECTRICITY PILLAR
- ELECTRICAL SUBSTATION
- STREET TREES
- RETAINING WALLS
- STORMWATER PIPE
- SEWER JUNCTION
- S SEWER MAIN
- W WATER MAIN
- NBN TELSTRA /NBN
- P UNDER GROUND POWER

Anticipated Site Classification - H1 Class
(to be confirmed at completion of construction)

(AB) RESTRICTION ON THE USE OF LAND 0.7 WIDE
(AA) EASEMENT TO DRAIN WATER 2.0 WIDE

RESTRICTIONS ON USE OF LAND AFFECT THE LOT

DISCLAIMER/ NOTES:

1. Contours are based on finished design levels and are subject to construction and Council certification and therefore should not be considered as final or as-built.
2. Location of utility services including but not limited to power, water, sewer, communications and gas are subject to construction and Supply Authority certification and therefore should not be considered as final or as-built.
3. Survey information such as boundary dimensions and areas, easements etc are subject to Final Survey. Purchasers should refer to the Deposited Plan and 88B Instrument contained in the Contract for Sale of Land for further detailed information.
4. Bushfire and Geotechnical classification are provided for convenience. Purchasers should refer to referenced detail specialist reports.
5. This Preliminary Site Analysis Plan has been collated from various sources of design information and is provided for convenience to assist Purchasers in obtaining quotations/tenders for dwelling construction.
6. This document does not form part of the Contract of Sale of the Land.

REVISION/S:	HD27 STAGE 1 MARKETING r2
DATE:	8th MARCH 2019
BY:	HIGH DEFINITION DESIGN PTY LTD

LOT 130, ROAD 4, EDGEWORTH

BRUSH CREEK
LAKE MACQUARIE

MASTER PLAN

STAGE PLAN

PRELIMINARY SITE ANALYSIS PLAN

SCALE 1:300 @ A4

0 5 10 15 20

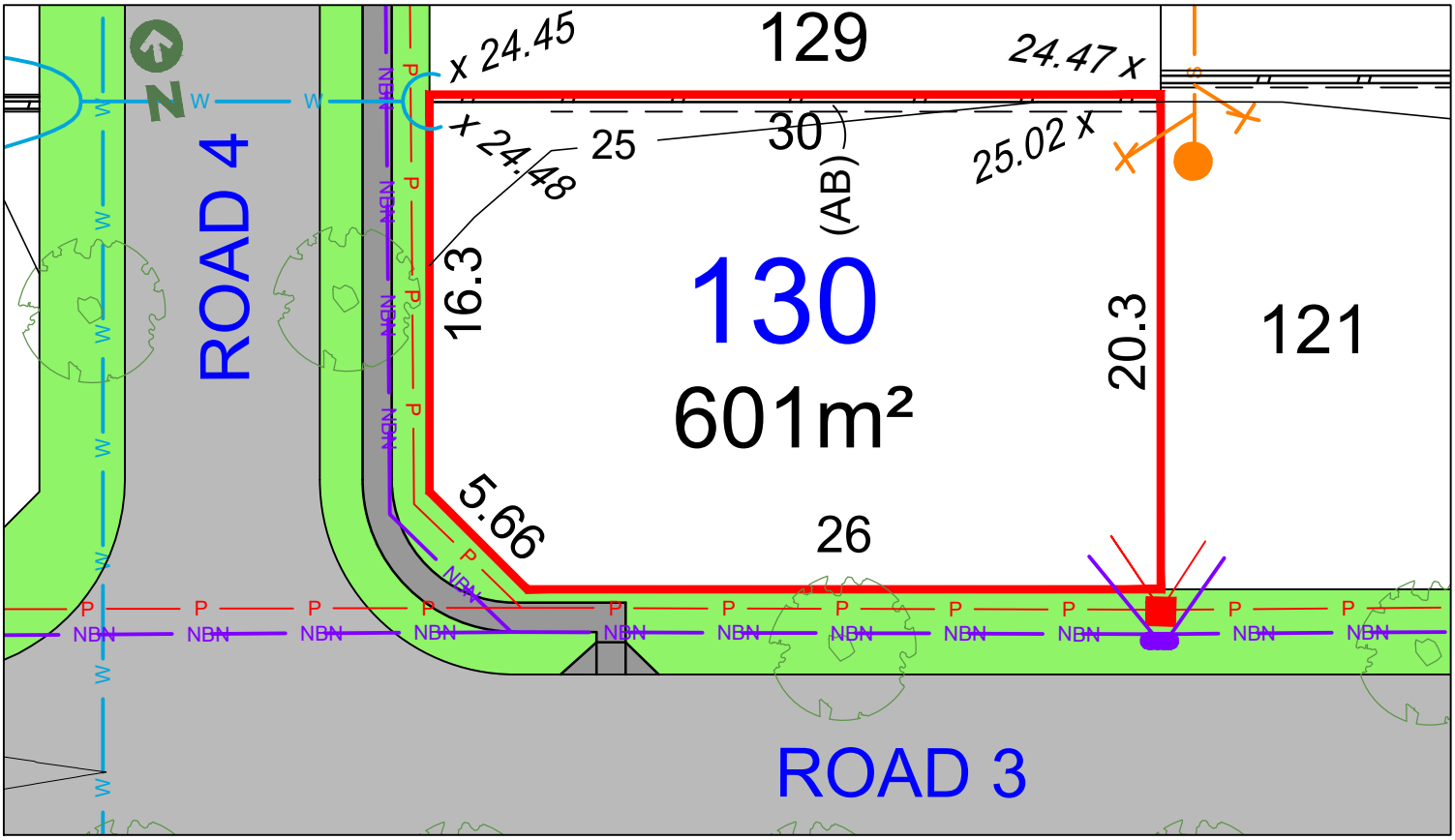

LEGEND:

- TELSTRA /NBN PIT
- HYDRANT
- STOP VALVE
- SEWER MANHOLE
- LIGHT POLE
- KERB INLET PIT
- STORMWATER PIT
- ELECTRICITY PILLAR
- ELECTRICAL SUBSTATION
- STREET TREES
- RETAINING WALLS
- STORMWATER PIPE
- SEWER JUNCTION
- S — SEWER MAIN
- W — WATER MAIN
- NBN — TELSTRA /NBN
- P — UNDER GROUND POWER

Anticipated Site Classification - H1 Class
(to be confirmed at completion of construction)

(AB) RESTRICTION ON THE USE OF LAND 0.7 WIDE
(AA) EASEMENT TO DRAIN WATER 2.0 WIDE

RESTRICTIONS ON USE OF LAND AFFECT THE LOT

DISCLAIMER/ NOTES:

1. Contours are based on finished design levels and are subject to construction and Council certification and therefore should not be considered as final or as-built.
2. Location of utility services including but not limited to power, water, sewer, communications and gas are subject to construction and Supply Authority certification and therefore should not be considered as final or as-built.
3. Survey information such as boundary dimensions and areas, easements etc are subject to Final Survey. Purchasers should refer to the Deposited Plan and 88B Instrument contained in the Contract for Sale of Land for further detailed information.
4. Bushfire and Geotechnical classification are provided for convenience. Purchasers should refer to referenced detail specialist reports.
5. This Preliminary Site Analysis Plan has been collated from various sources of design information and is provided for convenience to assist Purchasers in obtaining quotations/tenders for dwelling construction.
6. This document does not form part of the Contract of Sale of the Land.

REVISION/S:	HD27 STAGE 1 MARKETING r2
DATE:	8th MARCH 2019
BY:	HIGH DEFINITION DESIGN PTY LTD

LOT 131, ROAD 3, EDGEWORTH

BRUSH CREEK
LAKE MACQUARIE

MASTER PLAN

STAGE PLAN

PRELIMINARY SITE ANALYSIS PLAN

SCALE 1:300 @ A4 — 0 5 10 15 20

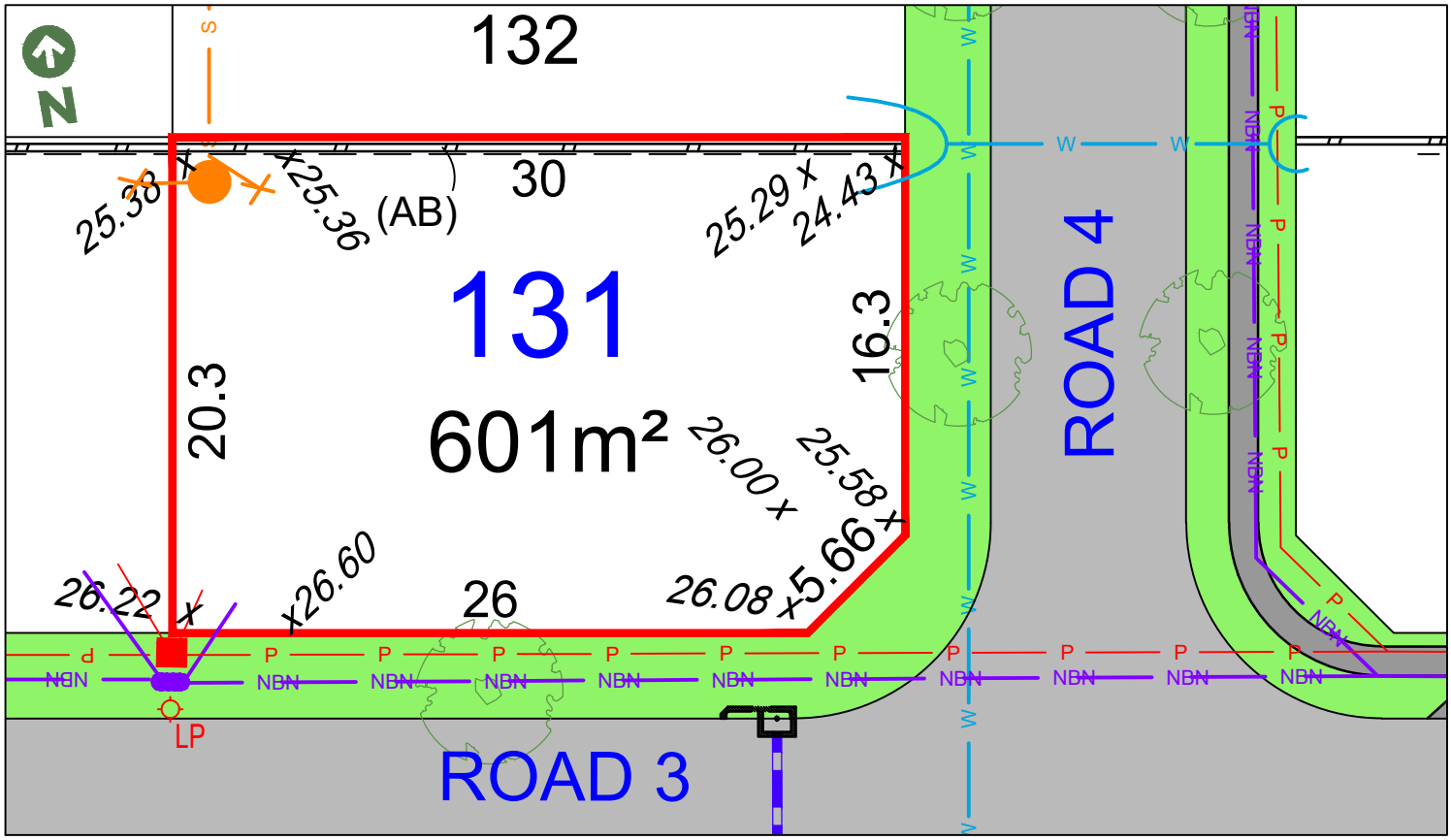

LEGEND:

- TELSTRA /NBN PIT
- HYDRANT
- STOP VALVE
- SEWER MANHOLE
- LIGHT POLE
- KERB INLET PIT
- STORMWATER PIT
- ELECTRICITY PILLAR
- ELECTRICAL SUBSTATION
- STREET TREES
- RETAINING WALLS
- STORMWATER PIPE
- SEWER JUNCTION
- S — SEWER MAIN
- W — WATER MAIN
- NBN — TELSTRA /NBN
- P — UNDER GROUND POWER

Anticipated Site Classification - H1 Class
(to be confirmed at completion of construction)

(AB) RESTRICTION ON THE USE OF LAND 0.7 WIDE
(AA) EASEMENT TO DRAIN WATER 2.0 WIDE

RESTRICTIONS ON USE OF LAND AFFECT THE LOT

DISCLAIMER/ NOTES:

1. Contours are based on finished design levels and are subject to construction and Council certification and therefore should not be considered as final or as-built.
2. Location of utility services including but not limited to power, water, sewer, communications and gas are subject to construction and Supply Authority certification and therefore should not be considered as final or as-built.
3. Survey information such as boundary dimensions and areas, easements etc are subject to Final Survey. Purchasers should refer to the Deposited Plan and 88B Instrument contained in the Contract for Sale of Land for further detailed information.
4. Bushfire and Geotechnical classification are provided for convenience. Purchasers should refer to referenced detail specialist reports.
5. This Preliminary Site Analysis Plan has been collated from various sources of design information and is provided for convenience to assist Purchasers in obtaining quotations/tenders for dwelling construction.
6. This document does not form part of the Contract of Sale of the Land.

REVISION/S:	HD27 STAGE 1 MARKETING r2
DATE:	14th MAY 2019
BY:	HIGH DEFINITION DESIGN PTY LTD

LOT 132, ROAD 4, EDGEWORTH

BRUSH CREEK
LAKE MACQUARIE

MASTER PLAN

STAGE PLAN

PRELIMINARY SITE ANALYSIS PLAN

SCALE 1:300 @ A4

0 5 10 15 20

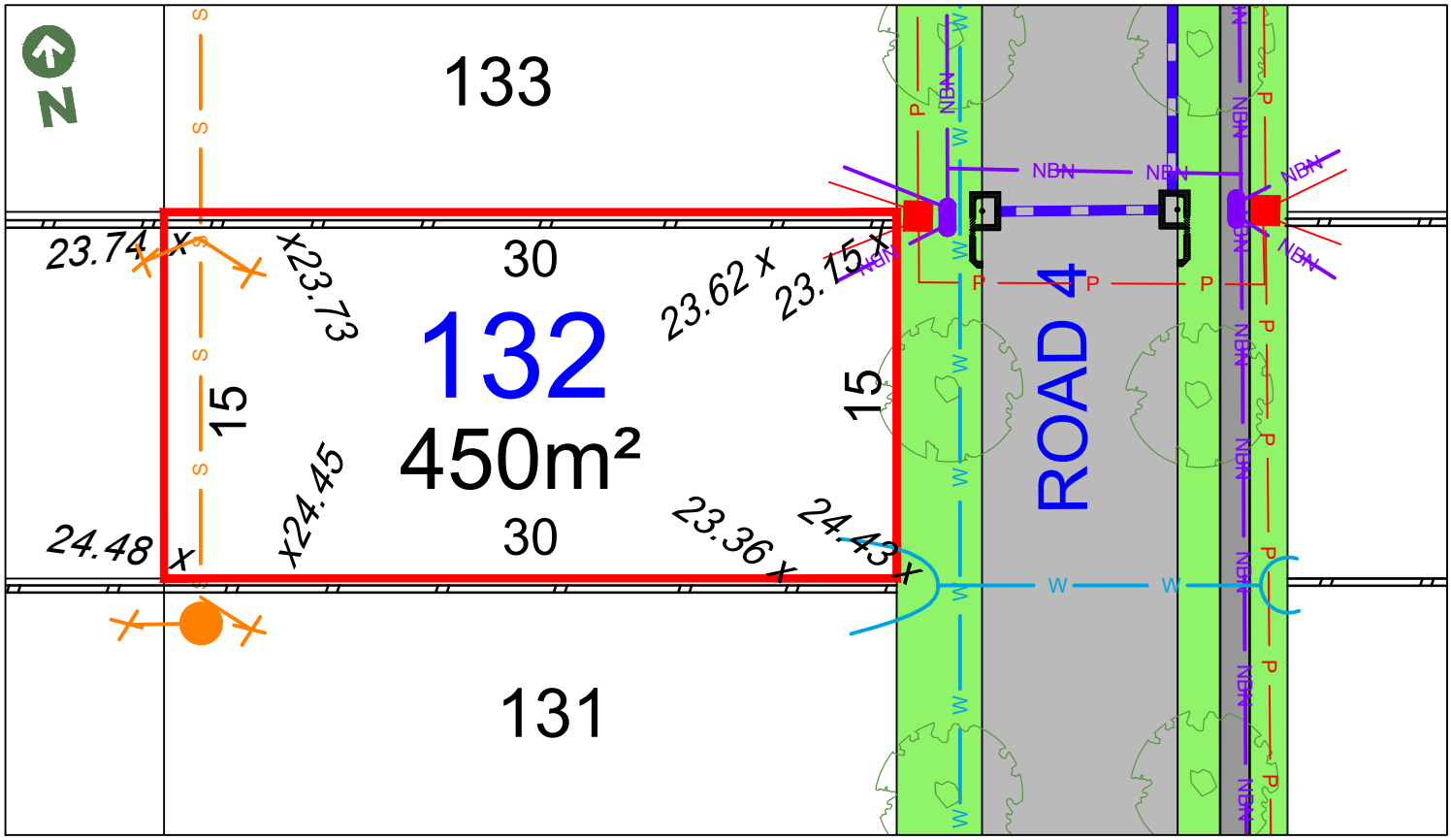

LEGEND:

- TELSTRA /NBN PIT
- HYDRANT
- STOP VALVE
- SEWER MANHOLE
- LP LIGHT POLE
- KERB INLET PIT
- STORMWATER PIT
- ELECTRICITY PILLAR
- ELECTRICAL SUBSTATION
- STREET TREES
- RETAINING WALLS
- STORMWATER PIPE
- SEWER JUNCTION
- S SEWER MAIN
- W WATER MAIN
- NBN TELSTRA /NBN
- P UNDER GROUND POWER

Anticipated Site Classification - H1 Class
(to be confirmed at completion of construction)

(AB) RESTRICTION ON THE USE OF LAND 0.7 WIDE
(AA) EASEMENT TO DRAIN WATER 2.0 WIDE

RESTRICTIONS ON USE OF LAND AFFECT THE LOT

DISCLAIMER/ NOTES:

1. Contours are based on finished design levels and are subject to construction and Council certification and therefore should not be considered as final or as-built.
2. Location of utility services including but not limited to power, water, sewer, communications and gas are subject to construction and Supply Authority certification and therefore should not be considered as final or as-built.
3. Survey information such as boundary dimensions and areas, easements etc are subject to Final Survey. Purchasers should refer to the Deposited Plan and 88B Instrument contained in the Contract for Sale of Land for further detailed information.
4. Bushfire and Geotechnical classification are provided for convenience. Purchasers should refer to referenced detail specialist reports.
5. This Preliminary Site Analysis Plan has been collated from various sources of design information and is provided for convenience to assist Purchasers in obtaining quotations/tenders for dwelling construction.
6. This document does not form part of the Contract of Sale of the Land.

REVISION/S:	HD27 STAGE 1 MARKETING r2
DATE:	11th June 2019
BY:	HIGH DEFINITION DESIGN PTY LTD

LOT 133, ROAD 4, EDGEWORTH

BRUSH CREEK
LAKE MACQUARIE

MASTER PLAN

STAGE PLAN

PRELIMINARY SITE ANALYSIS PLAN

SCALE 1:300 @ A4

0 5 10 15 20

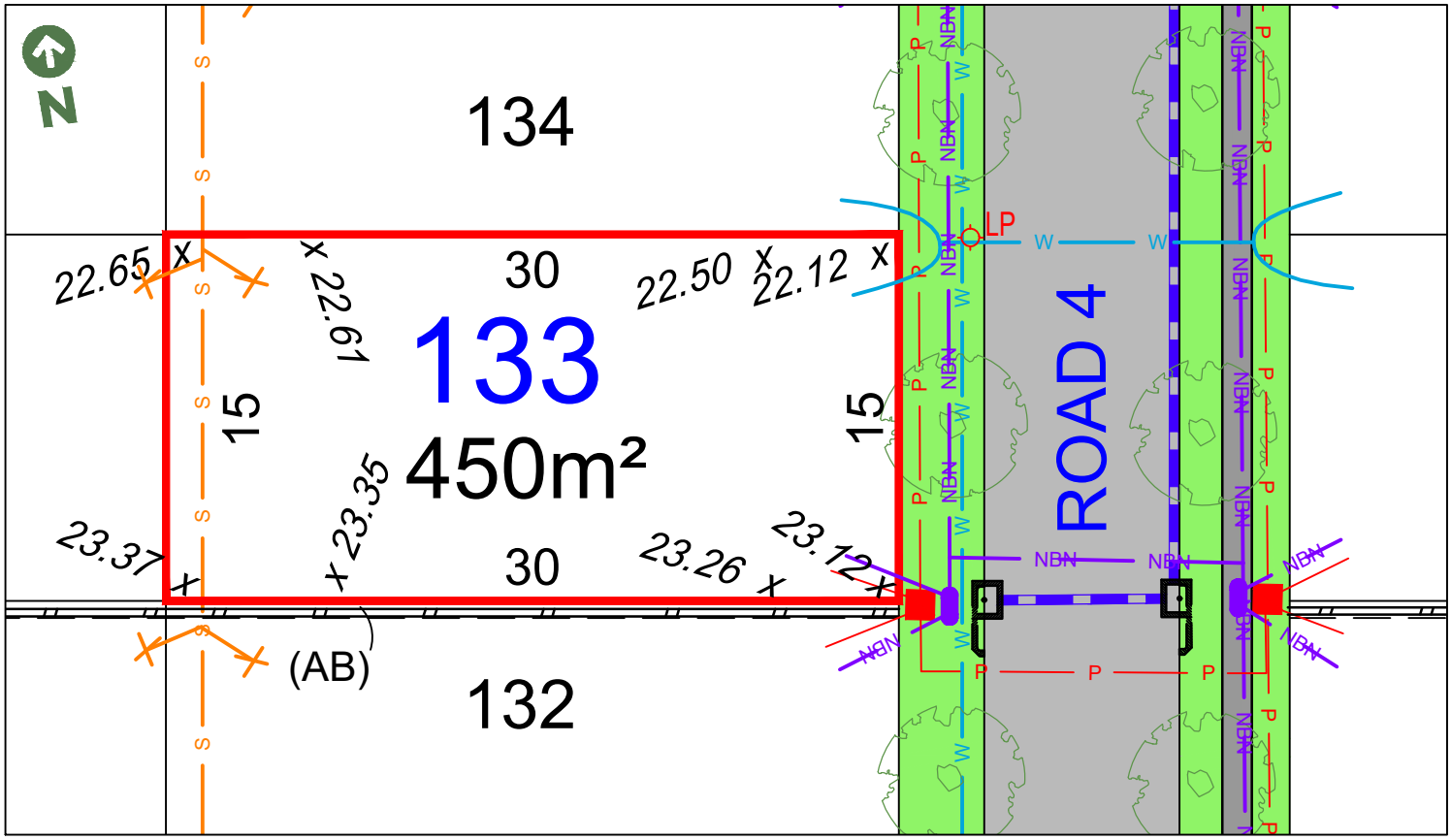

LEGEND:

- TELSTRA /NBN PIT
- HYDRANT
- STOP VALVE
- SEWER MANHOLE
- LIGHT POLE
- KERB INLET PIT
- STORMWATER PIT
- ELECTRICITY PILLAR
- ELECTRICAL SUBSTATION
- STREET TREES
- RETAINING WALLS
- STORMWATER PIPE
- SEWER JUNCTION
- S — SEWER MAIN
- W — WATER MAIN
- NBN — TELSTRA /NBN
- P — UNDER GROUND POWER

Anticipated Site Classification - H1 Class
(to be confirmed at completion of construction)

(AB) RESTRICTION ON THE USE OF LAND 0.7 WIDE
(AA) EASEMENT TO DRAIN WATER 2.0 WIDE

RESTRICTIONS ON USE OF LAND AFFECT THE LOT

DISCLAIMER/ NOTES:

1. Contours are based on finished design levels and are subject to construction and Council certification and therefore should not be considered as final or as-built.
2. Location of utility services including but not limited to power, water, sewer, communications and gas are subject to construction and Supply Authority certification and therefore should not be considered as final or as-built.
3. Survey information such as boundary dimensions and areas, easements etc are subject to Final Survey. Purchasers should refer to the Deposited Plan and 88B Instrument contained in the Contract for Sale of Land for further detailed information.
4. Bushfire and Geotechnical classification are provided for convenience. Purchasers should refer to referenced detail specialist reports.
5. This Preliminary Site Analysis Plan has been collated from various sources of design information and is provided for convenience to assist Purchasers in obtaining quotations/tenders for dwelling construction.
6. This document does not form part of the Contract of Sale of the Land.

REVISION/S:	HD27 STAGE 1 MARKETING r2
DATE:	14th May 2019
BY:	HIGH DEFINITION DESIGN PTY LTD

LOT 134, ROAD 4, EDGEWORTH

BRUSH CREEK
LAKE MACQUARIE

MASTER PLAN

STAGE PLAN

PRELIMINARY SITE ANALYSIS PLAN

SCALE 1:300 @ A4 — 0 5 10 15 20

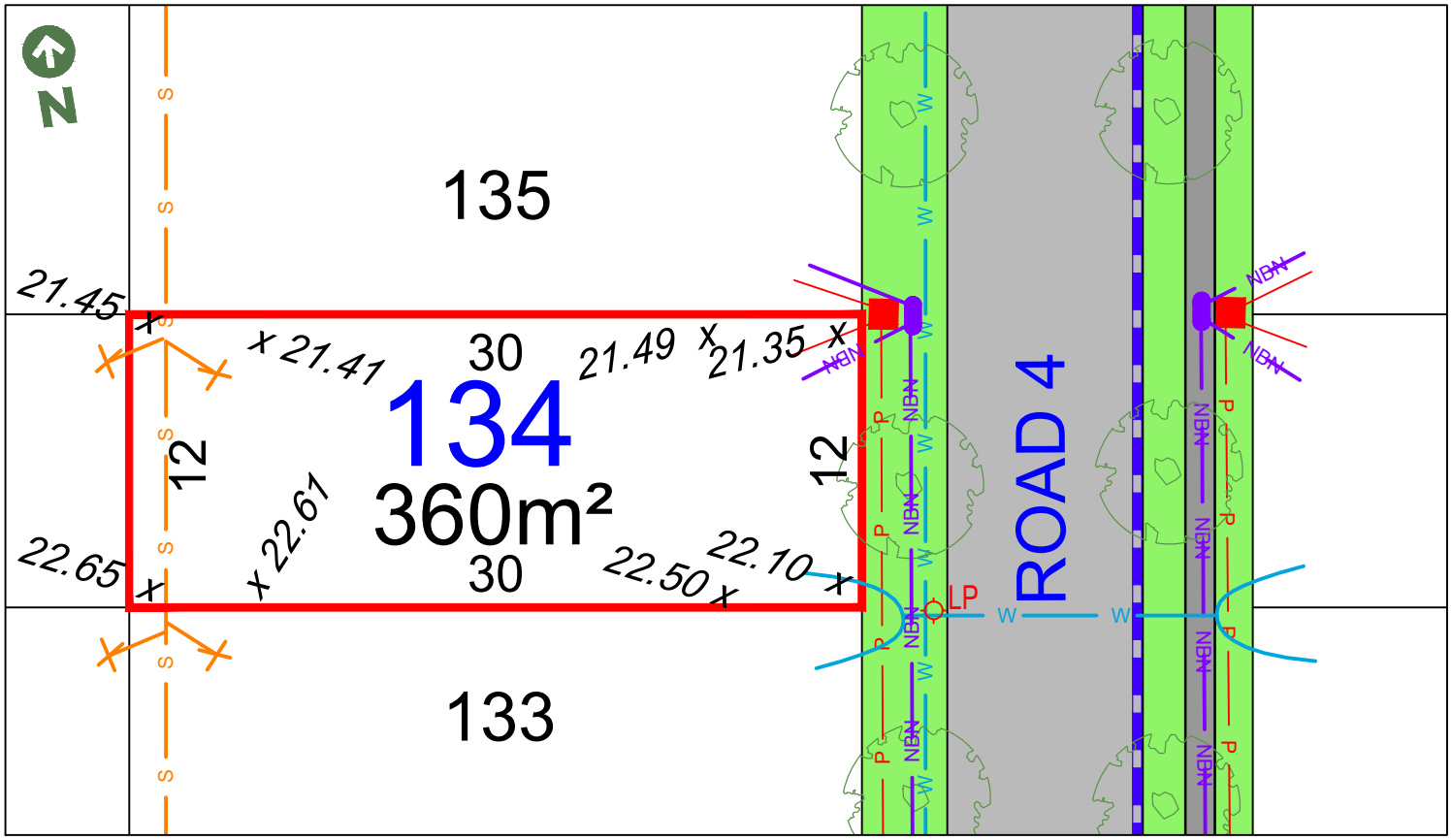

LEGEND:

- TELSTRA /NBN PIT
- HYDRANT
- STOP VALVE
- SEWER MANHOLE
- LP LIGHT POLE
- KERB INLET PIT
- STORMWATER PIT
- ELECTRICITY PILLAR
- ELECTRICAL SUBSTATION
- STREET TREES
- RETAINING WALLS
- STORMWATER PIPE
- SEWER JUNCTION
- S SEWER MAIN
- W WATER MAIN
- NBN TELSTRA /NBN
- P UNDER GROUND POWER

Anticipated Site Classification - H1 Class
(to be confirmed at completion of construction)

(AB) RESTRICTION ON THE USE OF LAND 0.7 WIDE
(AA) EASEMENT TO DRAIN WATER 2.0 WIDE

RESTRICTIONS ON USE OF LAND AFFECT THE LOT

DISCLAIMER/ NOTES:

1. Contours are based on finished design levels and are subject to construction and Council certification and therefore should not be considered as final or as-built.
2. Location of utility services including but not limited to power, water, sewer, communications and gas are subject to construction and Supply Authority certification and therefore should not be considered as final or as-built.
3. Survey information such as boundary dimensions and areas, easements etc are subject to Final Survey. Purchasers should refer to the Deposited Plan and 88B Instrument contained in the Contract for Sale of Land for further detailed information.
4. Bushfire and Geotechnical classification are provided for convenience. Purchasers should refer to referenced detail specialist reports.
5. This Preliminary Site Analysis Plan has been collated from various sources of design information and is provided for convenience to assist Purchasers in obtaining quotations/tenders for dwelling construction.
6. This document does not form part of the Contract of Sale of the Land.

REVISION/S:	HD27 STAGE 1 MARKETING r2
DATE:	14th May 2019
BY:	HIGH DEFINITION DESIGN PTY LTD

LOT 135, ROAD 4, EDGEWORTH

BRUSH CREEK
— LAKE MACQUARIE —

MASTER PLAN

STAGE PLAN

PRELIMINARY SITE ANALYSIS PLAN

SCALE 1:300 @ A4

0 5 10 15 20

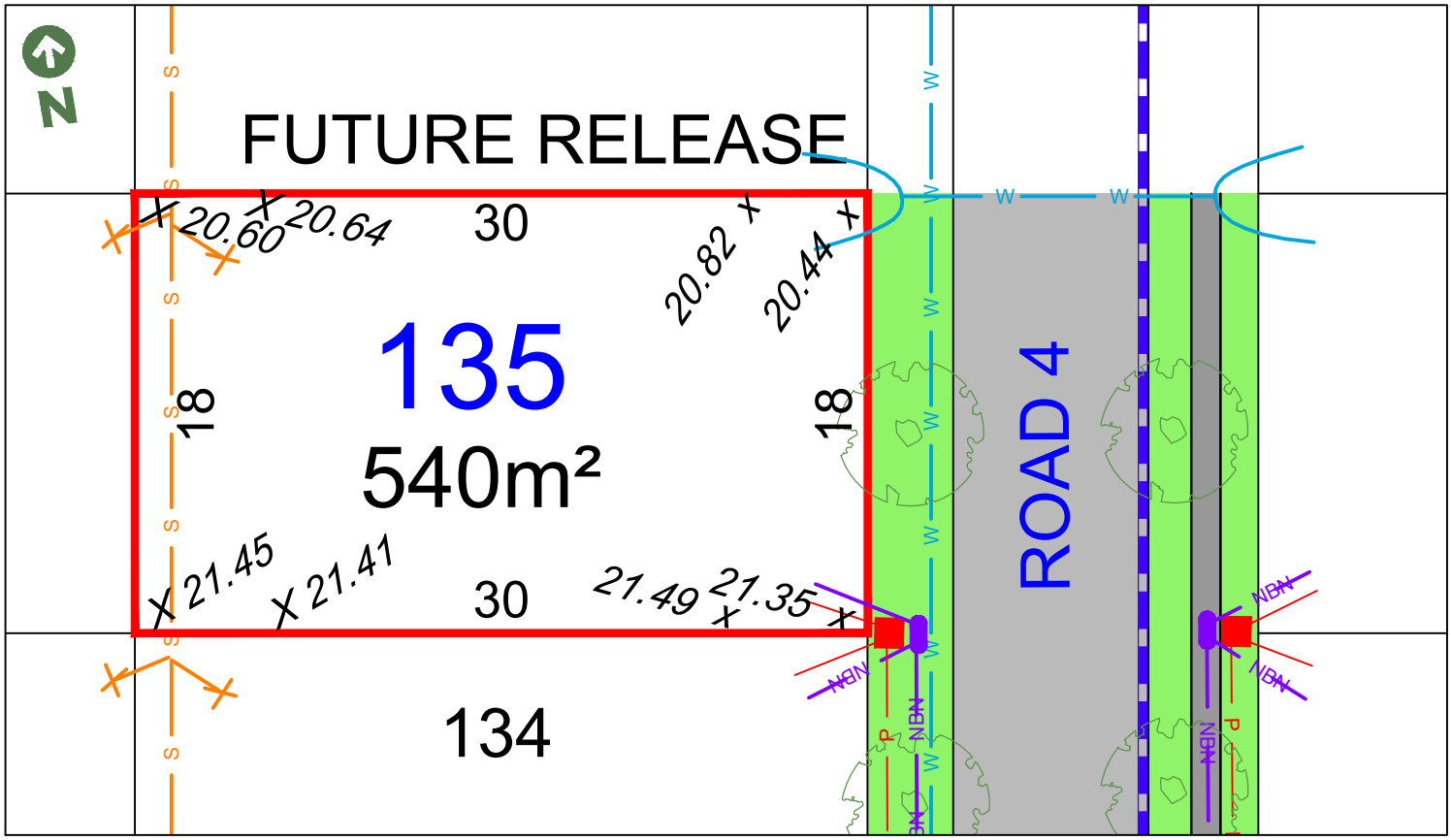

LEGEND:

- TELSTRA /NBN PIT
- HYDRANT
- STOP VALVE
- SEWER MANHOLE
- LP LIGHT POLE
- KERB INLET PIT
- STORMWATER PIT
- ELECTRICITY PILLAR
- ELECTRICAL SUBSTATION
- STREET TREES

- RETAINING WALLS
- STORMWATER PIPE
- SEWER JUNCTION
- S SEWER MAIN
- W WATER MAIN
- NBN TELSTRA /NBN
- P UNDER GROUND POWER

Anticipated Site Classification - H1 Class
(to be confirmed at completion of construction)

(AB) RESTRICTION ON THE USE OF LAND 0.7 WIDE
(AA) EASEMENT TO DRAIN WATER 2.0 WIDE

RESTRICTIONS ON USE OF LAND AFFECT THE LOT

DISCLAIMER/ NOTES:

1. Contours are based on finished design levels and are subject to construction and Council certification and therefore should not be considered as final or as-built.
2. Location of utility services including but not limited to power, water, sewer, communications and gas are subject to construction and Supply Authority certification and therefore should not be considered as final or as-built.
3. Survey information such as boundary dimensions and areas, easements etc are subject to Final Survey. Purchasers should refer to the Deposited Plan and 88B Instrument contained in the Contract for Sale of Land for further detailed information.
4. Bushfire and Geotechnical classification are provided for convenience. Purchasers should refer to referenced detail specialist reports.
5. This Preliminary Site Analysis Plan has been collated from various sources of design information and is provided for convenience to assist Purchasers in obtaining quotations/tenders for dwelling construction.
6. This document does not form part of the Contract of Sale of the Land.

REVISION/S:	HD27 STAGE 1 MARKETING r2
DATE:	14th May 2019
BY:	HIGH DEFINITION DESIGN PTY LTD

LOT 136, ROAD 5, EDGEWORTH

BRUSH CREEK
LAKE MACQUARIE

MASTER PLAN

STAGE PLAN

PRELIMINARY SITE ANALYSIS PLAN

SCALE 1:300 @ A4

0 5 10 15 20

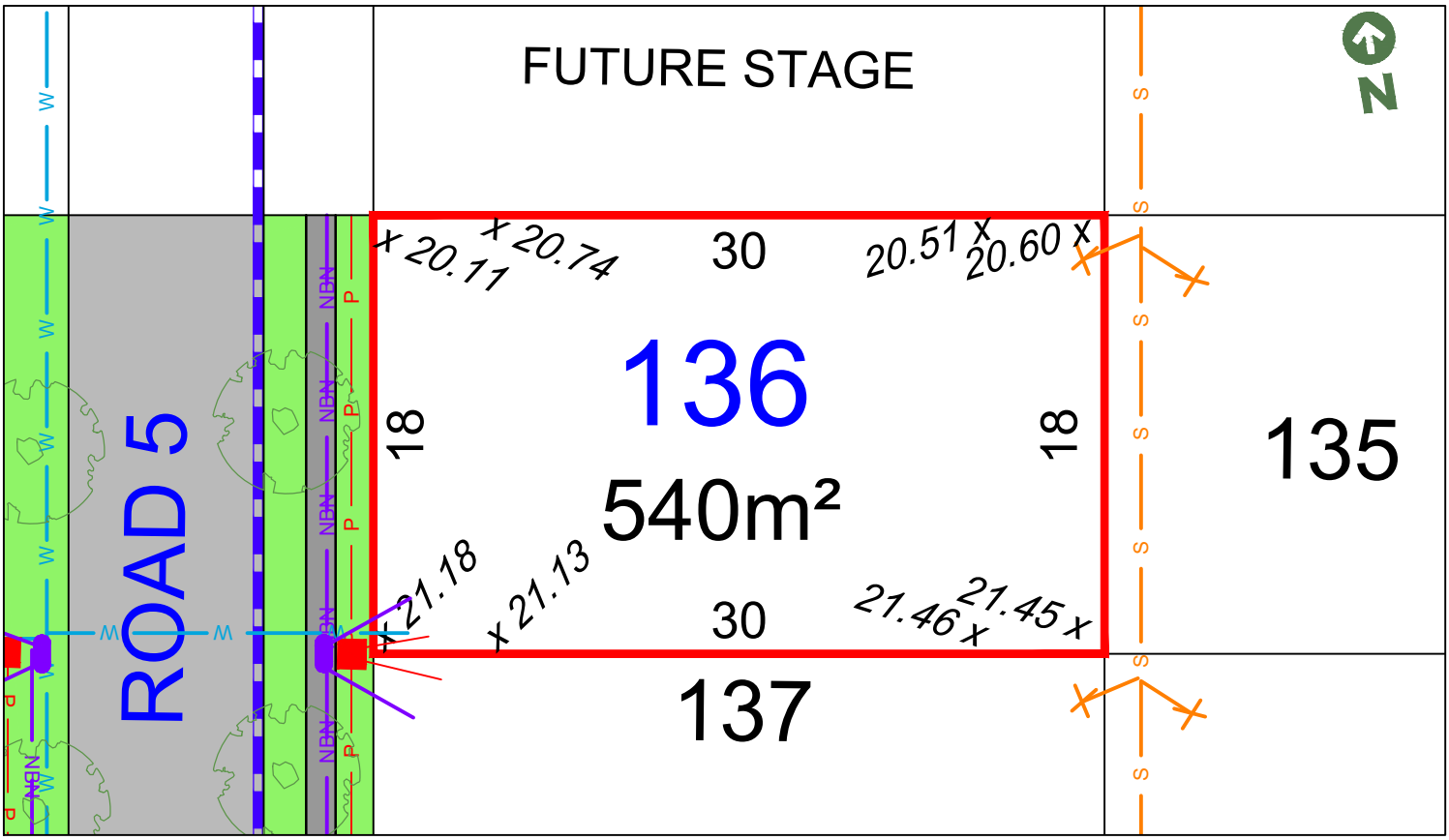

LEGEND:

- TELSTRA /NBN PIT
- HYDRANT
- STOP VALVE
- SEWER MANHOLE
- LP LIGHT POLE
- KERB INLET PIT
- STORMWATER PIT
- ELECTRICITY PILLAR
- ELECTRICAL SUBSTATION
- STREET TREES
- RETAINING WALLS
- STORMWATER PIPE
- SEWER JUNCTION
- S SEWER MAIN
- W WATER MAIN
- NBN TELSTRA /NBN
- P UNDER GROUND POWER

Anticipated Site Classification - H1 Class
(to be confirmed at completion of construction)

(AB) RESTRICTION ON THE USE OF LAND 0.7 WIDE
(AA) EASEMENT TO DRAIN WATER 2.0 WIDE

RESTRICTIONS ON USE OF LAND AFFECT THE LOT

DISCLAIMER/ NOTES:

1. Contours are based on finished design levels and are subject to construction and Council certification and therefore should not be considered as final or as-built.
2. Location of utility services including but not limited to power, water, sewer, communications and gas are subject to construction and Supply Authority certification and therefore should not be considered as final or as-built.
3. Survey information such as boundary dimensions and areas, easements etc are subject to Final Survey. Purchasers should refer to the Deposited Plan and 88B Instrument contained in the Contract for Sale of Land for further detailed information.
4. Bushfire and Geotechnical classification are provided for convenience. Purchasers should refer to referenced detail specialist reports.
5. This Preliminary Site Analysis Plan has been collated from various sources of design information and is provided for convenience to assist Purchasers in obtaining quotations/tenders for dwelling construction.
6. This document does not form part of the Contract of Sale of the Land.

REVISION/S:	HD27 STAGE 1 MARKETING r2
DATE:	17th MAY 2019
BY:	HIGH DEFINITION DESIGN PTY LTD

LOT 137, ROAD 5, EDGEWORTH

BRUSH CREEK
LAKE MACQUARIE

MASTER PLAN

STAGE PLAN

PRELIMINARY SITE ANALYSIS PLAN

SCALE 1:300 @ A4

0 5 10 15 20

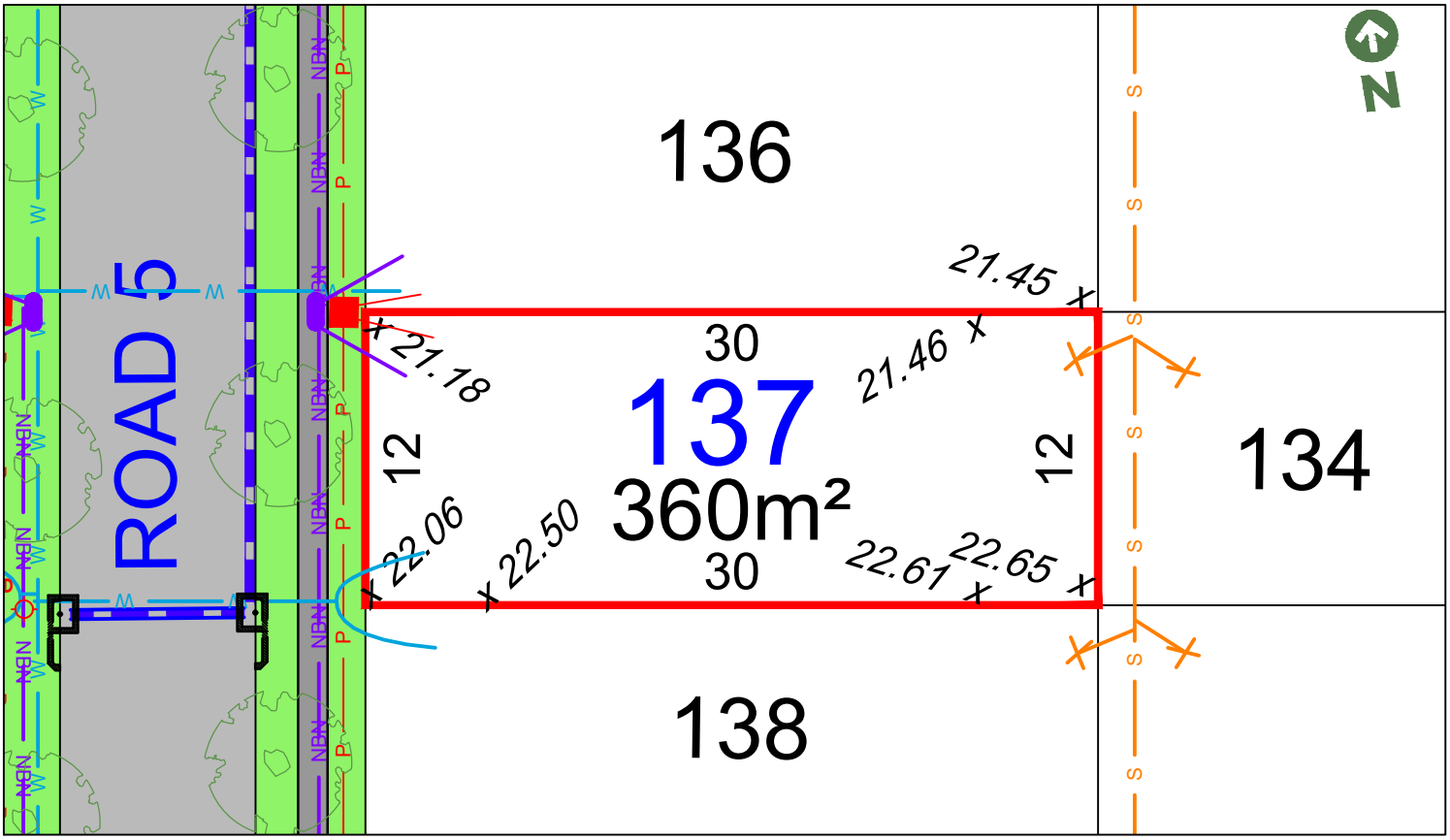

LEGEND:

- TELSTRA /NBN PIT
- HYDRANT
- STOP VALVE
- SEWER MANHOLE
- LP LIGHT POLE
- KERB INLET PIT
- STORMWATER PIT
- ELECTRICITY PILLAR
- ELECTRICAL SUBSTATION
- STREET TREES
- RETAINING WALLS
- STORMWATER PIPE
- SEWER JUNCTION
- S SEWER MAIN
- W WATER MAIN
- NBN TELSTRA /NBN
- P UNDER GROUND POWER

Anticipated Site Classification - H1 Class
(to be confirmed at completion of construction)

(AB) RESTRICTION ON THE USE OF LAND 0.7 WIDE
(AA) EASEMENT TO DRAIN WATER 2.0 WIDE

RESTRICTIONS ON USE OF LAND AFFECT THE LOT

DISCLAIMER/ NOTES:

1. Contours are based on finished design levels and are subject to construction and Council certification and therefore should not be considered as final or as-built.
2. Location of utility services including but not limited to power, water, sewer, communications and gas are subject to construction and Supply Authority certification and therefore should not be considered as final or as-built.
3. Survey information such as boundary dimensions and areas, easements etc are subject to Final Survey. Purchasers should refer to the Deposited Plan and 88B Instrument contained in the Contract for Sale of Land for further detailed information.
4. Bushfire and Geotechnical classification are provided for convenience. Purchasers should refer to referenced detail specialist reports.
5. This Preliminary Site Analysis Plan has been collated from various sources of design information and is provided for convenience to assist Purchasers in obtaining quotations/tenders for dwelling construction.
6. This document does not form part of the Contract of Sale of the Land.

REVISION/S:	HD27 STAGE 1 MARKETING r2
DATE:	17th MAY 2019
BY:	HIGH DEFINITION DESIGN PTY LTD

LOT 138, ROAD 5, EDGEWORTH

BRUSH CREEK
LAKE MACQUARIE

MASTER PLAN

STAGE PLAN

PRELIMINARY SITE ANALYSIS PLAN

SCALE 1:300 @ A4 0 5 10 15 20

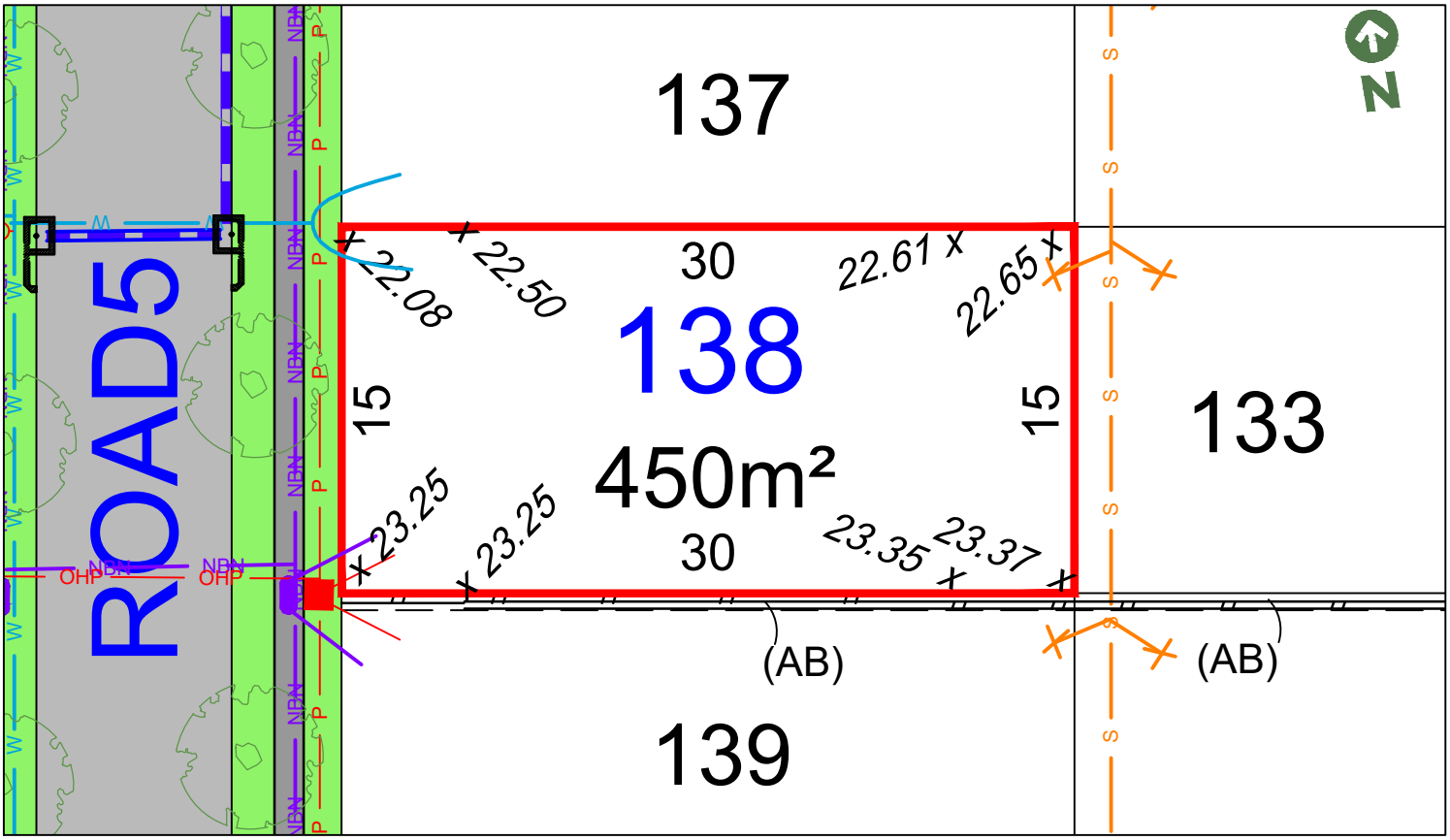

LEGEND:

- TELSTRA /NBN PIT
- HYDRANT
- STOP VALVE
- SEWER MANHOLE
- LIGHT POLE
- KERB INLET PIT
- STORMWATER PIT
- ELECTRICITY PILLAR
- ELECTRICAL SUBSTATION
- STREET TREES
- RETAINING WALLS
- STORMWATER PIPE
- SEWER JUNCTION
- SEWER MAIN
- WATER MAIN
- TELSTRA /NBN
- UNDER GROUND POWER

Anticipated Site Classification - H1 Class
(to be confirmed at completion of construction)

(AB) RESTRICTION ON THE USE OF LAND 0.7 WIDE
(AA) EASEMENT TO DRAIN WATER 2.0 WIDE

RESTRICTIONS ON USE OF LAND AFFECT THE LOT

DISCLAIMER/ NOTES:

1. Contours are based on finished design levels and are subject to construction and Council certification and therefore should not be considered as final or as-built.
2. Location of utility services including but not limited to power, water, sewer, communications and gas are subject to construction and Supply Authority certification and therefore should not be considered as final or as-built.
3. Survey information such as boundary dimensions and areas, easements etc are subject to Final Survey. Purchasers should refer to the Deposited Plan and 88B Instrument contained in the Contract for Sale of Land for further detailed information.
4. Bushfire and Geotechnical classification are provided for convenience. Purchasers should refer to referenced detail specialist reports.
5. This Preliminary Site Analysis Plan has been collated from various sources of design information and is provided for convenience to assist Purchasers in obtaining quotations/tenders for dwelling construction.
6. This document does not form part of the Contract of Sale of the Land.

REVISION/S:	HD27 STAGE 1 MARKETING r2
DATE:	11th June 2019
BY:	HIGH DEFINITION DESIGN PTY LTD

LOT 139, ROAD 5, EDGEWORTH

BRUSH CREEK
LAKE MACQUARIE

MASTER PLAN

STAGE PLAN

PRELIMINARY SITE ANALYSIS PLAN

SCALE 1:300 @ A4 0 5 10 15 20

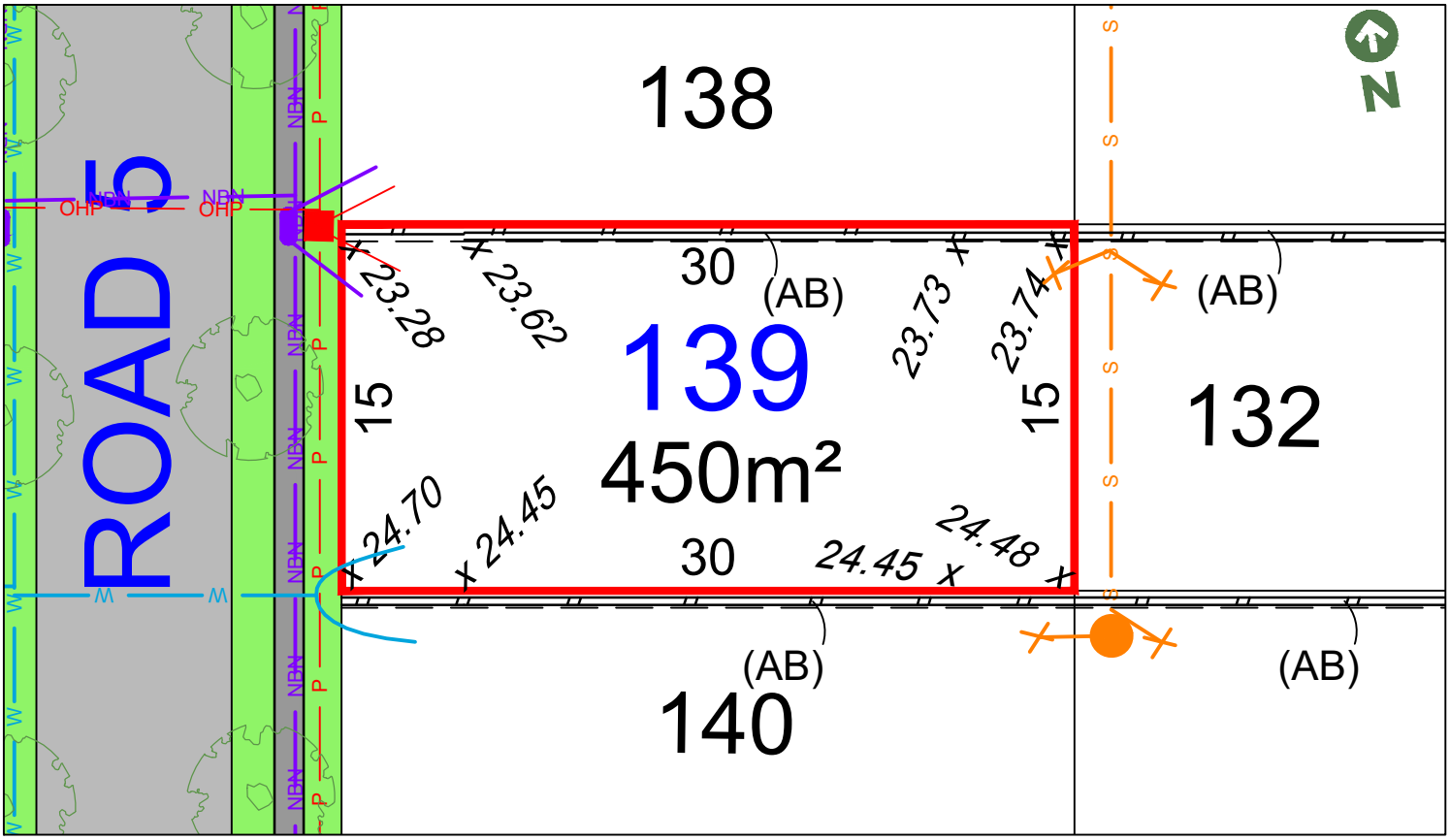

LEGEND:

- TELSTRA /NBN PIT
- HYDRANT
- STOP VALVE
- SEWER MANHOLE
- LP LIGHT POLE
- KERB INLET PIT
- STORMWATER PIT
- ELECTRICITY PILLAR
- ELECTRICAL SUBSTATION
- STREET TREES
- RETAINING WALLS
- STORMWATER PIPE
- SEWER JUNCTION
- S SEWER MAIN
- W WATER MAIN
- NBN TELSTRA /NBN
- P UNDER GROUND POWER

Anticipated Site Classification - H1 Class
(to be confirmed at completion of construction)

(AB) RESTRICTION ON THE USE OF LAND 0.7 WIDE
(AA) EASEMENT TO DRAIN WATER 2.0 WIDE

RESTRICTIONS ON USE OF LAND AFFECT THE LOT

DISCLAIMER/ NOTES:

1. Contours are based on finished design levels and are subject to construction and Council certification and therefore should not be considered as final or as-built.
2. Location of utility services including but not limited to power, water, sewer, communications and gas are subject to construction and Supply Authority certification and therefore should not be considered as final or as-built.
3. Survey information such as boundary dimensions and areas, easements etc are subject to Final Survey. Purchasers should refer to the Deposited Plan and 88B Instrument contained in the Contract for Sale of Land for further detailed information.
4. Bushfire and Geotechnical classification are provided for convenience. Purchasers should refer to referenced detail specialist reports.
5. This Preliminary Site Analysis Plan has been collated from various sources of design information and is provided for convenience to assist Purchasers in obtaining quotations/tenders for dwelling construction.
6. This document does not form part of the Contract of Sale of the Land.

REVISION/S:	HD27 STAGE 1 MARKETING r2
DATE:	17th MAY 2019
BY:	HIGH DEFINITION DESIGN PTY LTD

LOT 142, ROAD 5, EDGEWORTH

BRUSH CREEK
LAKE MACQUARIE

MASTER PLAN

STAGE PLAN

PRELIMINARY SITE ANALYSIS PLAN

SCALE 1:300 @ A4

0 5 10 15 20

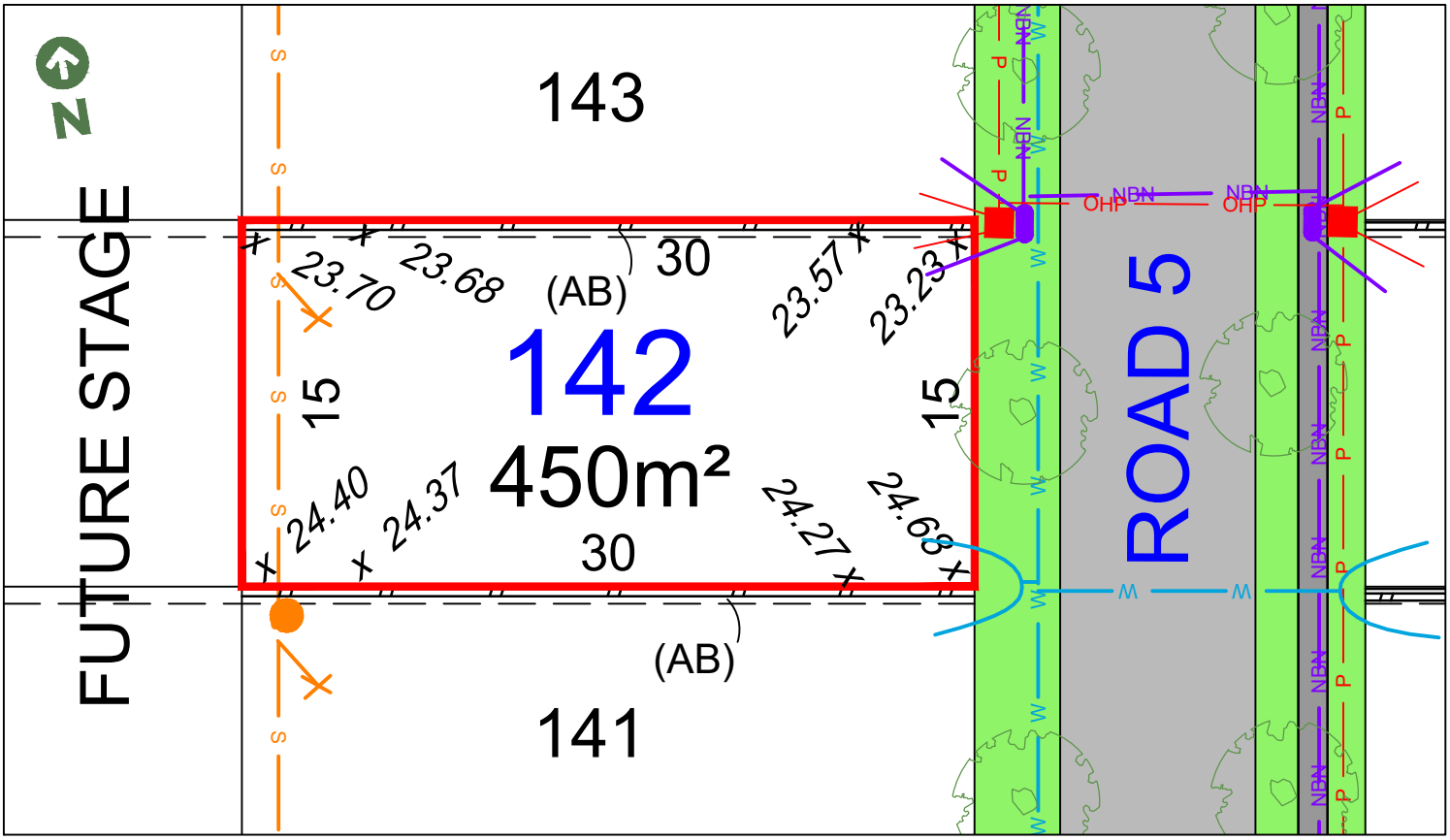

LEGEND:

- TELSTRA /NBN PIT
- HYDRANT
- STOP VALVE
- SEWER MANHOLE
- LIGHT POLE
- KERB INLET PIT
- STORMWATER PIT
- ELECTRICITY PILLAR
- ELECTRICAL SUBSTATION
- STREET TREES
- RETAINING WALLS
- STORMWATER PIPE
- SEWER JUNCTION
- SEWER MAIN
- WATER MAIN
- TELSTRA /NBN
- UNDER GROUND POWER

Anticipated Site Classification - H1 Class
(to be confirmed at completion of construction)

(AB) RESTRICTION ON THE USE OF LAND 0.7 WIDE
(AA) EASEMENT TO DRAIN WATER 2.0 WIDE

RESTRICTIONS ON USE OF LAND AFFECT THE LOT

DISCLAIMER/ NOTES:

1. Contours are based on finished design levels and are subject to construction and Council certification and therefore should not be considered as final or as-built.
2. Location of utility services including but not limited to power, water, sewer, communications and gas are subject to construction and Supply Authority certification and therefore should not be considered as final or as-built.
3. Survey information such as boundary dimensions and areas, easements etc are subject to Final Survey. Purchasers should refer to the Deposited Plan and 88B Instrument contained in the Contract for Sale of Land for further detailed information.
4. Bushfire and Geotechnical classification are provided for convenience. Purchasers should refer to referenced detail specialist reports.
5. This Preliminary Site Analysis Plan has been collated from various sources of design information and is provided for convenience to assist Purchasers in obtaining quotations/tenders for dwelling construction.
6. This document does not form part of the Contract of Sale of the Land.

REVISION/S:	HD27 STAGE 1 MARKETING r2
DATE:	17th MAY 2019
BY:	HIGH DEFINITION DESIGN PTY LTD

LOT 143, ROAD 5, EDGEWORTH

BRUSH CREEK
LAKE MACQUARIE

MASTER PLAN

STAGE PLAN

PRELIMINARY SITE ANALYSIS PLAN

SCALE 1:300 @ A4

0 5 10 15 20

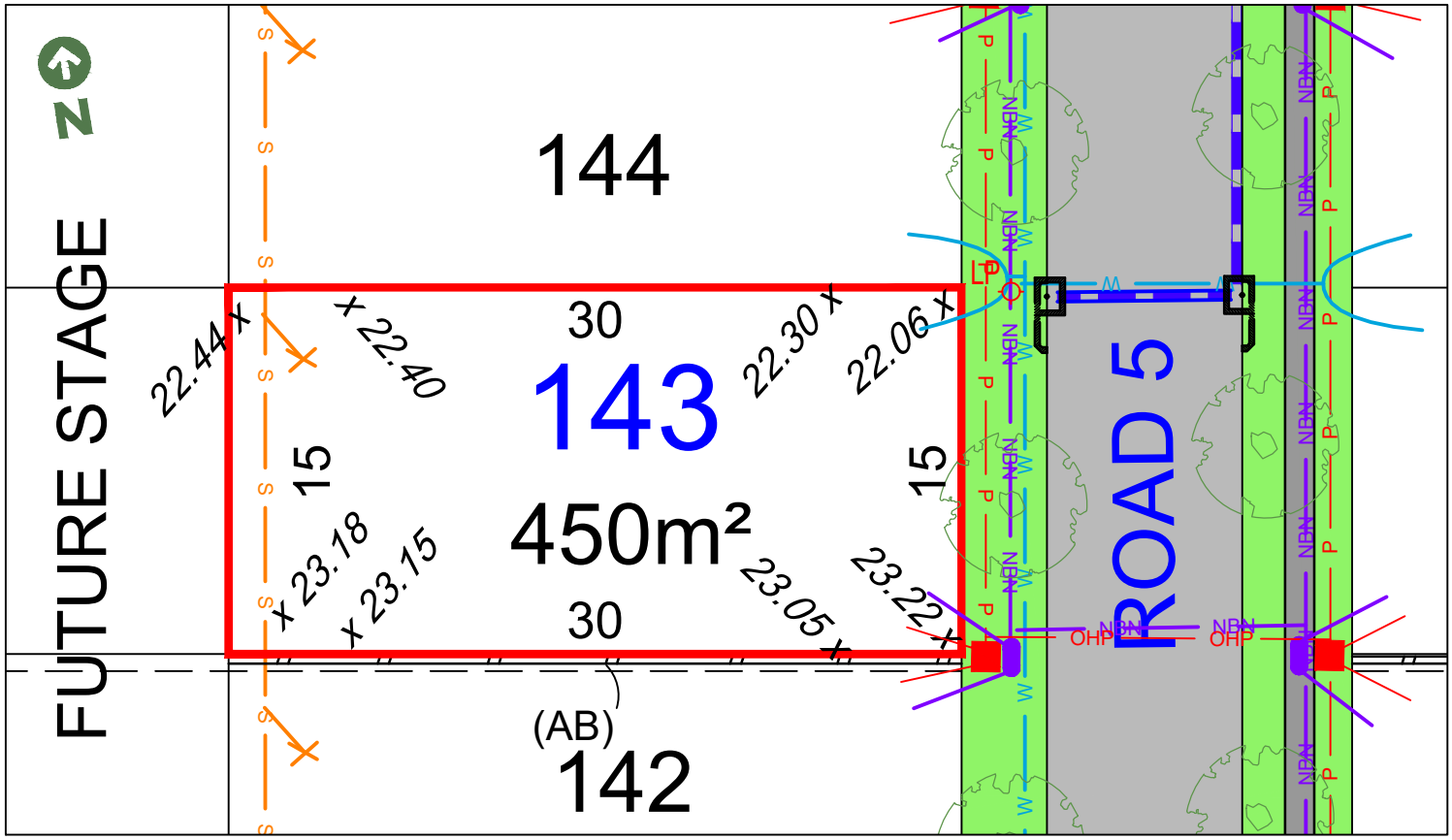

LEGEND:

- TELSTRA /NBN PIT
- HYDRANT
- STOP VALVE
- SEWER MANHOLE
- LP LIGHT POLE
- KERB INLET PIT
- STORMWATER PIT
- ELECTRICITY PILLAR
- ELECTRICAL SUBSTATION
- STREET TREES
- RETAINING WALLS
- STORMWATER PIPE
- SEWER JUNCTION
- S SEWER MAIN
- W WATER MAIN
- NBN TELSTRA /NBN
- P UNDER GROUND POWER

Anticipated Site Classification - H1 Class
(to be confirmed at completion of construction)

(AB) RESTRICTION ON THE USE OF LAND 0.7 WIDE
(AA) EASEMENT TO DRAIN WATER 2.0 WIDE

RESTRICTIONS ON USE OF LAND AFFECT THE LOT

DISCLAIMER/ NOTES:

1. Contours are based on finished design levels and are subject to construction and Council certification and therefore should not be considered as final or as-built.
2. Location of utility services including but not limited to power, water, sewer, communications and gas are subject to construction and Supply Authority certification and therefore should not be considered as final or as-built.
3. Survey information such as boundary dimensions and areas, easements etc are subject to Final Survey. Purchasers should refer to the Deposited Plan and 88B Instrument contained in the Contract for Sale of Land for further detailed information.
4. Bushfire and Geotechnical classification are provided for convenience. Purchasers should refer to referenced detail specialist reports.
5. This Preliminary Site Analysis Plan has been collated from various sources of design information and is provided for convenience to assist Purchasers in obtaining quotations/tenders for dwelling construction.
6. This document does not form part of the Contract of Sale of the Land.

REVISION/S:	HD27 STAGE 1 MARKETING r2
DATE:	17th MAY 2019
BY:	HIGH DEFINITION DESIGN PTY LTD

LOT 144, ROAD 5, EDGEWORTH

BRUSH CREEK
LAKE MACQUARIE

MASTER PLAN

STAGE PLAN

PRELIMINARY SITE ANALYSIS PLAN

SCALE 1:300 @ A4

0 5 10 15 20

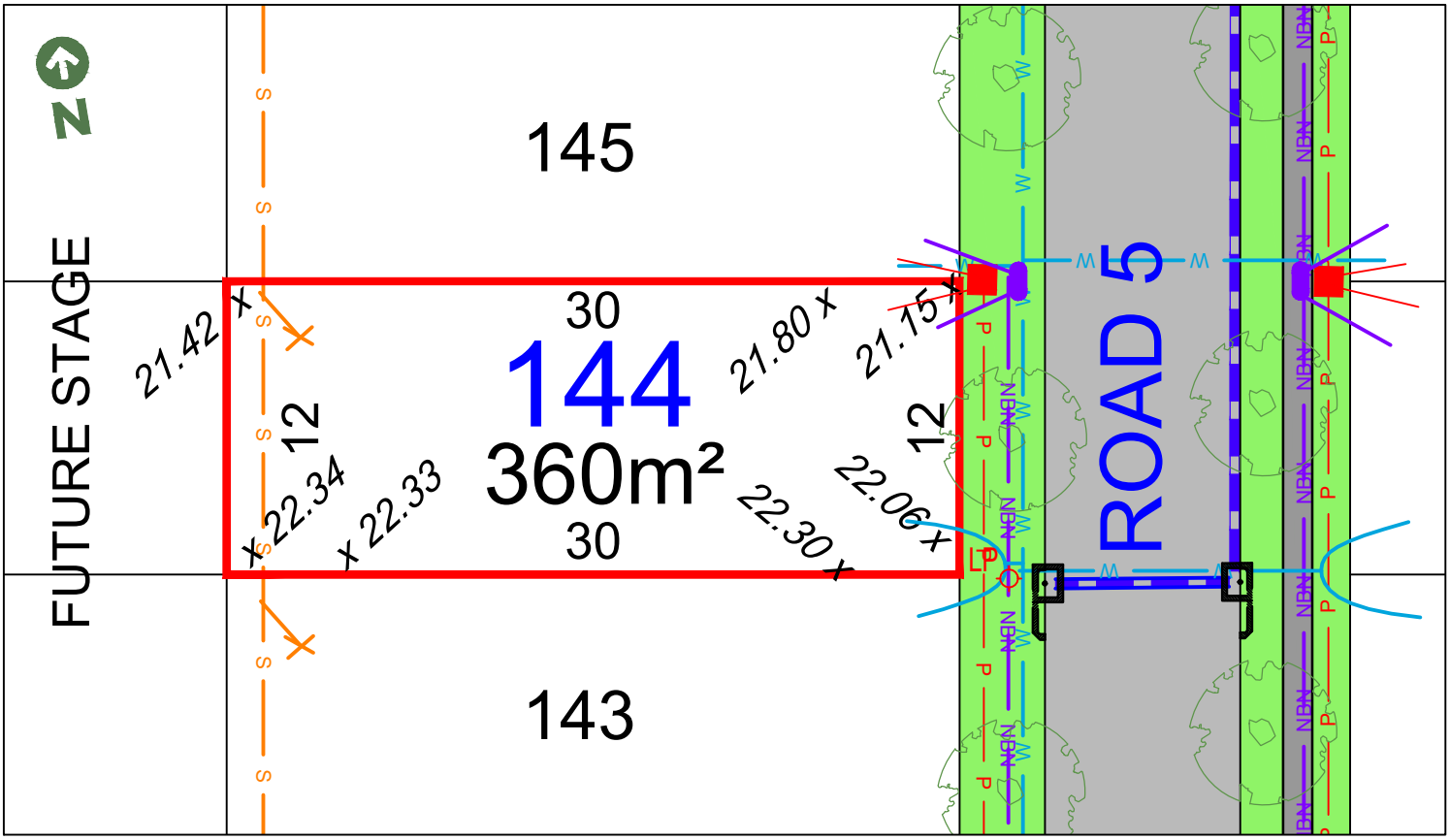

LEGEND:

- TELSTRA /NBN PIT
- HYDRANT
- STOP VALVE
- SEWER MANHOLE
- LP LIGHT POLE
- KERB INLET PIT
- STORMWATER PIT
- ELECTRICITY PILLAR
- ELECTRICAL SUBSTATION
- STREET TREES
- RETAINING WALLS
- STORMWATER PIPE
- SEWER JUNCTION
- S SEWER MAIN
- W WATER MAIN
- NBN TELSTRA /NBN
- P UNDER GROUND POWER

Anticipated Site Classification - H1 Class
(to be confirmed at completion of construction)

(AB) RESTRICTION ON THE USE OF LAND 0.7 WIDE
(AA) EASEMENT TO DRAIN WATER 2.0 WIDE

RESTRICTIONS ON USE OF LAND AFFECT THE LOT

DISCLAIMER/ NOTES:

1. Contours are based on finished design levels and are subject to construction and Council certification and therefore should not be considered as final or as-built.
2. Location of utility services including but not limited to power, water, sewer, communications and gas are subject to construction and Supply Authority certification and therefore should not be considered as final or as-built.
3. Survey information such as boundary dimensions and areas, easements etc are subject to Final Survey. Purchasers should refer to the Deposited Plan and 88B Instrument contained in the Contract for Sale of Land for further detailed information.
4. Bushfire and Geotechnical classification are provided for convenience. Purchasers should refer to referenced detail specialist reports.
5. This Preliminary Site Analysis Plan has been collated from various sources of design information and is provided for convenience to assist Purchasers in obtaining quotations/tenders for dwelling construction.
6. This document does not form part of the Contract of Sale of the Land.

REVISION/S:	HD27 STAGE 1 MARKETING r2
DATE:	17th MAY 2019
BY:	HIGH DEFINITION DESIGN PTY LTD

LOT 145, ROAD 5, EDGEWORTH

BRUSH CREEK
LAKE MACQUARIE

MASTER PLAN

STAGE PLAN

PRELIMINARY SITE ANALYSIS PLAN

SCALE 1:300 @ A4

0 5 10 15 20

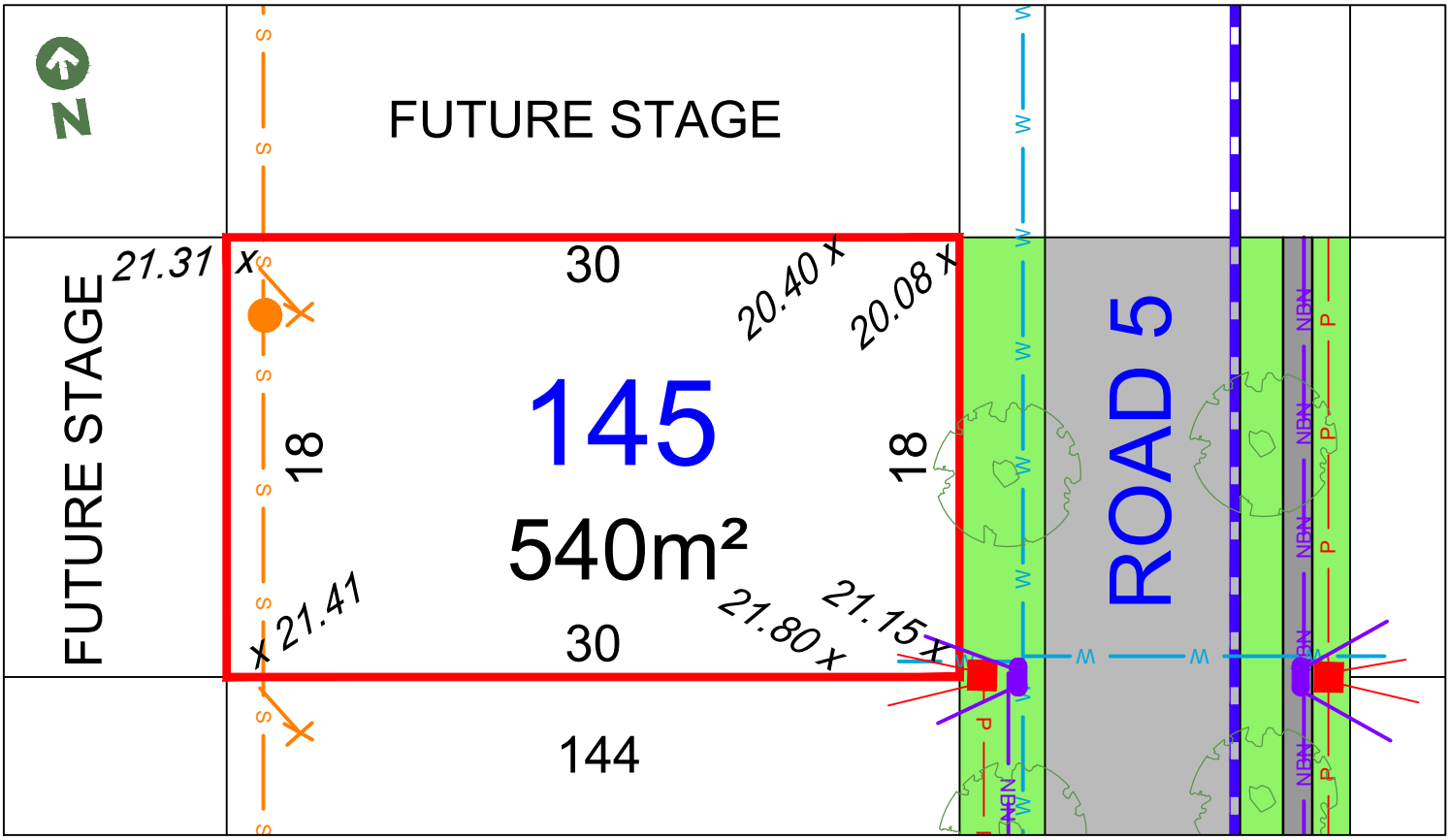

LEGEND:

- TELSTRA /NBN PIT
- HYDRANT
- STOP VALVE
- SEWER MANHOLE
- LIGHT POLE
- KERB INLET PIT
- STORMWATER PIT
- ELECTRICITY PILLAR
- ELECTRICAL SUBSTATION
- STREET TREES
- RETAINING WALLS
- STORMWATER PIPE
- SEWER JUNCTION
- S — SEWER MAIN
- W — WATER MAIN
- NBN — TELSTRA /NBN
- P — UNDER GROUND POWER

Anticipated Site Classification - H1 Class
(to be confirmed at completion of construction)

(AB) RESTRICTION ON THE USE OF LAND 0.7 WIDE
(AA) EASEMENT TO DRAIN WATER 2.0 WIDE

RESTRICTIONS ON USE OF LAND AFFECT THE LOT

DISCLAIMER/ NOTES:

1. Contours are based on finished design levels and are subject to construction and Council certification and therefore should not be considered as final or as-built.
2. Location of utility services including but not limited to power, water, sewer, communications and gas are subject to construction and Supply Authority certification and therefore should not be considered as final or as-built.
3. Survey information such as boundary dimensions and areas, easements etc are subject to Final Survey. Purchasers should refer to the Deposited Plan and 88B Instrument contained in the Contract for Sale of Land for further detailed information.
4. Bushfire and Geotechnical classification are provided for convenience. Purchasers should refer to referenced detail specialist reports.
5. This Preliminary Site Analysis Plan has been collated from various sources of design information and is provided for convenience to assist Purchasers in obtaining quotations/tenders for dwelling construction.
6. This document does not form part of the Contract of Sale of the Land.

REVISION/S:	HD27 STAGE 1 MARKETING r2
DATE:	17th MAY 2019
BY:	HIGH DEFINITION DESIGN PTY LTD